OM-189 507A

October 2000

Processes

Induction Heating

Description

Induction Heating Power Source

TOCCOtron® AC

Bench-Top Power Supply

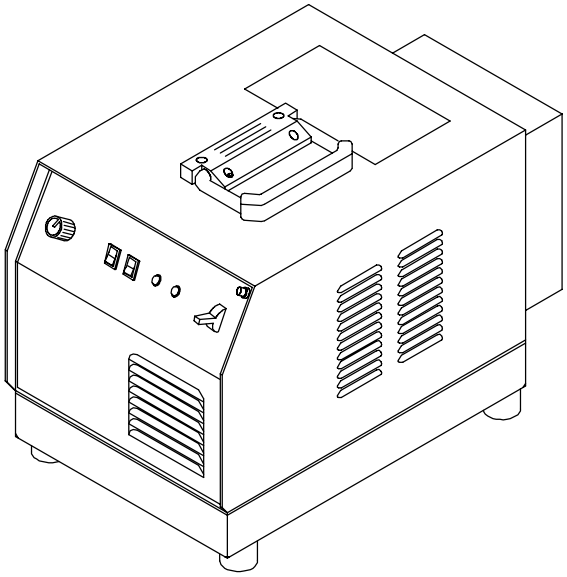

OWNER'S MANUAL

TABLE OF CONTENTS

SECTION 1 – SAFETY PRECAUTIONS – READ BEFORE USING

1-1. Symbol Usage

Means Warning! Watch Out! There are possible hazards with this procedure! The possible hazards are shown in the adjoining symbols.

▲ **Marks a special safety message.**

☞ *Means "Note"; not safety related.*

safety_ihom 5/98

This group of symbols means Warning! Watch Out! possible ELECTRIC SHOCK, MOVING PARTS, and HOT PARTS hazards. Consult symbols and related instructions below for necessary actions to avoid the hazards.

1-2. Induction Heating Hazards

▲ **The symbols shown below are used throughout this manual to call attention to and identify possible hazards. When you see the symbol, watch out, and follow the related instructions to avoid the hazard. The safety information given below is only a summary of the more complete safety information found in the Safety Standards listed in Section 1-4. Read and follow all Safety Standards.**

▲ **Only qualified persons should install, operate, maintain, and repair this unit.**

▲ **During operation, keep everybody, especially children, away.**

ELECTRIC SHOCK can kill.

Touching live electrical parts can cause fatal shocks or severe burns. The power circuit and output bus bars or connections are electrically live whenever the output is on. The input power circuit and machine internal circuits are also live when power is on. Incorrectly installed or improperly grounded equipment is a hazard.

- Do not touch live electrical parts.
- Enclose any connecting bus bars and coolant fittings to prevent unintentional contact.
- Wear dry, hole-free insulating gloves and body protection.
- Insulate yourself from work and ground using dry insulating mats or covers big enough to prevent any physical contact with the work or ground.
- Disconnect input power before installing or servicing this equipment. Lockout/tagout input power according to OSHA 29 CFR 1910.147 (see Safety Standards).
- Use only nonconductive coolant hoses with a minimum length of 18 inches (457 mm) to provide isolation.
- Properly install and ground this equipment according to its Owner's Manual and national, state, and local codes.
- Always verify the supply ground – check and be sure that input power cord ground wire is properly connected to ground terminal in disconnect box or that cord plug is connected to a properly grounded receptacle outlet.
- When making input connections, attach proper grounding conductor first – double-check connections.
- Frequently inspect input power cord for damage or bare wiring – replace cord immediately if damaged – bare wiring can kill.
- Turn off all equipment when not in use.
- Do not use worn, damaged, undersized, or poorly spliced cables.
- Do not drape cables over your body.
- Do not touch power circuit if you are in contact with the work, ground, or another power circuit from a different machine.
- Use only well-maintained equipment. Repair or replace damaged parts at once. Maintain unit according to manual.
- Wear a safety harness if working above floor level.
- Keep all panels and covers securely in place.

SIGNIFICANT DC VOLTAGE exists after removal of input power on inverters.

- Turn Off inverter, disconnect input power, and discharge input capacitors according to instructions in Maintenance Section before touching any internal parts.

INDUCTION HEATING can cause burns.

- Hot parts and equipment can injure.
- Do not touch or handle induction head/coil during operation.
- Do not touch hot parts bare-handed.
- Allow cooling period before handling parts or equipment.
- Keep metal jewelry and other metal personal items away from head/coil during operation.

FIRE OR EXPLOSION hazard.

- Do not overheat parts and adhesive.
- Watch for fire; keep extinguisher nearby.
- Keep flammables away from work area.
- Do not locate unit on, over, or near combustible surfaces.
- Do not install unit near flammables.
- Do not operate unit in explosive atmosphere.

FUMES AND GASES can be hazardous.

Induction Heating of certain materials, adhesives, and fluxes can produce fumes and gases. Breathing these fumes and gases can be hazardous to your health.

- Keep your head out of the fumes. Do not breathe the fumes.
- If inside, ventilate the area and/or use exhaust to remove fumes and gases.
- If ventilation is poor, use an approved air-supplied respirator.
- Read the Material Safety Data Sheets (MSDSs) and the manufacturer's instruction for adhesives, fluxes, metals, consumables, coatings, cleaners, and degreasers.
- Work in a confined space only if it is well ventilated, or while wearing an air-supplied respirator. Always have a trained watchperson nearby. Fumes and gases from heating can displace air and lower the oxygen level causing injury or death. Be sure the breathing air is safe.
- Do not heat in locations near degreasing, cleaning, or spraying operations. The heat can react with vapors to form highly toxic and irritating gases.
- Do not overheat coated metals, such as galvanized, lead, or cadmium plated steel, unless the coating is removed from the heated area, the area is well ventilated, and if necessary, while wearing an air-supplied respirator. The coatings and any metals containing these elements can give off toxic fumes if overheated. See coating MSDS for temperature information.

1-3. Additional Symbols for Installation, Operation, and Maintenance

FALLING UNIT can cause injury.

- Use handle and have person of adequate physical strength lift unit.
- Move unit with hand cart or similar device.
- For units without a handle, use equipment of adequate capacity to lift unit.
- When using lift forks to move unit, be sure forks are long enough to extend beyond opposite side of unit.

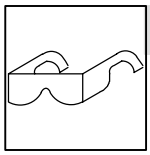

FLYING METAL OR ADHESIVE can injure eyes.

- Wear approved safety glasses with side shields or wear face shield.

MOVING PARTS can cause injury.

- Keep away from moving parts such as fans.
- Keep all doors, panels, covers, and guards closed and securely in place.

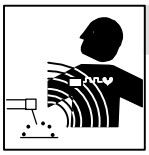

MAGNETIC FIELDS can affect pacemakers.

- Pacemaker wearers keep away.
- Wearers should consult their doctor before going near induction heating operations.

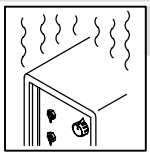

OVERUSE can cause OVERHEATING

- Allow cooling period.
- Reduce output or reduce duty cycle before starting to heat again.
- Follow rated duty cycle.

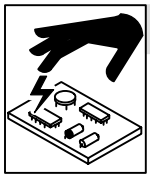

STATIC (ESD) can damage PC boards.

- Put on grounded wrist strap BEFORE handling boards or parts.
- Use proper static-proof bags and boxes to store, move, or ship PC boards.

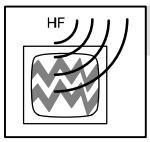

H.F. RADIATION can cause interference.

- High-frequency (H.F.) can interfere with radio navigation, safety services, computers, and communications equipment.
- Have only qualified person familiar with electronic equipment perform this installation.
- The user is responsible for having a qualified electrician promptly correct any interference problem resulting from the installation.
- If notified by the FCC about interference, stop using the equipment at once.
- Have the installation regularly checked and maintained.
- Keep high-frequency source doors and panels tightly shut.

1-4. Principal Safety Standards

Safety and Health Standards, OSHA 29 CFR 1910, from Superintendent of Documents, U.S. Government Printing Office, Washington, D.C. 20402.

National Electrical Code, NFPA Standard 70, from National Fire Protection Association, Batterymarch Park, Quincy, MA 02269.

Canadian Electrical Code Part 1, CSA Standard C22.1, from Canadian Standards Association, Standards Sales, 178 Rexdale Boulevard,Rexdale, Ontario, Canada M9W 1R3.

Safe Practices For Occupation And Educational Eye And Face Protection, ANSI Standard Z87.1, from American National Standards Institute, 1430 Broadway, New York, NY 10018.

1-5. EMF Information

Considerations About Induction Heating And The Effects Of Low Frequency Electric And Magnetic Fields

The following is a quotation from the General Conclusions Section of the U.S. Congress, Office of Technology Assessment, *Biological Effects of Power Frequency Electric & Magnetic Fields – Background Paper*, OTA-BP-E-53 (Washington, DC: U.S. Government Printing Office, May 1989): “. . . there is now a very large volume of scientific findings based on experiments at the cellular level and from studies with animals and people which clearly establish that low frequency magnetic fields can interact with, and produce changes in, biological systems. While most of this work is of very high quality, the results are complex. Current scientific understanding does not yet allow us to interpret the evidence in a single coherent framework. Even more frustrating, it does not yet allow us to draw definite conclusions about questions of possible risk or to offer clear science-based advice on strategies to minimize or avoid potential risks.”

To reduce magnetic fields in the workplace, use the following procedures:

1. Arrange output cable to one side and away from the operator.
2. Do not coil or drape output cable around the body.
3. Keep power source and cable as far away from the operator as practical.

About Pacemakers:

The above procedures are also recommended for pacemaker wearers. Consult your doctor for complete information.

SECTION 1 – MESURES DE SECURITE POUR LE CHAUFFAGE PAR INDUCTION

safetyihom_fre 5/98

AVERTISSEMENT **LE CHAUFFAGE PAR INDUCTION peut être dangereux.**

PRENDRE LES MESURES NECESSAIRES POUR EVITER LES RISQUES DE BLESSURES GRAVES, VOIRE MORTELLES. TENIR LES ENFANTS A DISTANCE. LES PORTEURS D'UN STIMULATEUR CARDIAQUE DOIVENT PREALABLEMENT CONSULTER LEUR MEDECIN.

Pendant les opérations de chauffage, comme dans la plupart des activités, l'opérateur s'expose à certains dangers. Le chauffage n'est pas dangereux à condition de prendre certaines mesures. Les consignes de sécurité indiquées ci-après ne sont qu'un résumé des informations plus détaillées se trouvant dans les normes de sécurité énumérées à la page suivante. Lire et respecter toutes les normes de sécurité.

LES OPERATIONS D'INSTALLATION, DE FONCTIONNEMENT, DE MAINTENANCE ET DE REPARATION NE DOIVENT ETRE CONFIEES QU'A DU PERSONNEL QUALIFIE.

Danger de mort PAR ELECTROCUTION.

Le contact de composants électriques peut provoquer des accidents mortels ou des brûlures graves. Le circuit de puissance et les connexions de sortie sont sous tension lorsqu'on active la sortie. Le circuit d'alimentation et les circuits internes de la machine sont également sous tension lorsque l'alimentation est sur marche. Des équipements installés ou reliés à la borne de terre de manière incorrecte sont dangereux.

1. Ne pas toucher des composants électriques sous tension.
2. Envelopper les connexions et raccords de refroidissement pour éviter tout contact accidentel.
3. Porter des gants d'isolation secs, sans trous, et une protection corporelle.
4. Isolez-vous de la pièce et du sol avec des tapis ou des couvertures d'isolation suffisamment grands pour prévenir tout contact physique avec la pièce ou la terre.
5. Déconnecter l'alimentation avant d'installer l'appareil ou d'en effectuer l'entretien. Verrouiller ou étiqueter la sortie d'alimentation selon la norme OSHA 29 CFR 1910.147 (se reporter aux Principales normes de sécurité).
6. Utiliser seulement des tuyaux non conducteurs avec une longueur minimale de 460 mm pour assurer l'isolement.
7. Installer et mettre cet équipement correctement à la terre conformément au manuel utilisateur et aux codes nationaux, gouvernementaux et locaux.
8. Vérifier souvent la terre de l'alimentation – contrôler et s'assurer que le conducteur de terre du câble d'alimentation est correctement relié à la borne de terre dans le boîtier de déconnexion ou que le connecteur est branché à une sortie de boîtier correctement mise à la terre.
9. En réalisant des connexions d'entrée brancher d'abord le conducteur de terre approprié – contrôler deux fois les connexions.
10. Vérifier souvent le bon état du câble d'alimentation ou l'isolation des fils – remplacer le câble immédiatement s'il est endommagé – des fils dénudés peuvent provoquer des accidents mortels.
11. Arrêter tous les équipements lorsqu'ils ne sont pas utilisés.
12. Ne pas utiliser des câbles usés, endommagés, sous dimensionnés ou mal épissés.
13. Ne pas porter les câbles autour de votre corps.
14. Ne pas toucher le circuit électrique si vous êtes en contact avec la pièce, la terre ou le circuit électrique d'une autre machine.
15. Utiliser seulement des équipements bien entretenus. Réparer ou remplacer immédiatement des composants endommagés. Effectuer des travaux d'entretien sur l'appareil selon le manuel.
16. Porter un harnais de sécurité pour effectuer des travaux au-dessus du sol.
17. Maintenir solidement en place tous les panneaux et couvercles.

LE CHAUFFAGE PAR INDUCTION peut provoquer des blessures ou des brûlures au contact de PIECES CHAUDES OU DE L'EQUIPEMENT.

1. Ne pas toucher ou manipuler la tête/l'enroulement à induction pendant le fonctionnement.
2. Tenir les bijoux et autres objets personnels en métal éloignés de la tête/de l'enroulement pendant le fonctionnement.
3. Laisser refroidir les composants ou équipements avant de les manipuler.

LE CHAUFFAGE PAR INDUCTION peut provoquer un incendie.

1. Ne pas surchauffer les composants ni les adhésifs.
2. Attention aux risques d'incendie: tenir un extincteur à proximité.
3. Stocker des produits inflammables hors de la zone de travail.

La mise en place de l'appareil sur, au-dessus ou à proximité de surfaces inflammables peut être source d'INCENDIES OU d'EXPLOSION.

1. Ne pas placer l'appareil sur, au-dessus ou à proximité de surfaces infllammables.
2. Ne pas installer l'appareil à proximité de produits inflammables
3. Ne pas faire fonctionner l'appareil en atmosphère explosive.

DES FUMEES ET DES GAZ peuvent être dangereux pour votre santé.

Le chauffage à induction génère des fumées et des gaz. Leur inhalation peut être dangereuse pour votre santé.

1. Eloigner la tête des fumées. Ne pas respirer les fumées.
2. A l'interieur, ventiler la zone et/ou utiliser un extracteur pour l'évacuation des fumées et des gaz.
3. Si la ventilation est insuffisante, utiliser un respirateur à alimentation d'air homologué.
4. Lire les spécifications de sécurité des matériaux (MSDSs) et les instructions du fabricant concernant les adhésifs, les métaux, les consommables, les revêtements, les nettoyants et les dégraisseurs.
5. Travailler dans un espace fermé seulement s'il est bien ventilé ou en portant un respirateur. Demander toujours à un surveillant dûment formé de se tenir à proximité. Des fumées et des gaz provenant du chauffage peuvent déplacer l'air, abaisser le niveau d'oxygène, et provoquer des lésions ou des accidents mortels. S'assurer que l'air ambiant ne présente aucun danger.
6. Ne pas chauffer dans des endroits se trouvant à proximité d'opérations de dégraissage, de nettoyage ou de pulvérisation. La chaleur peut réagir en présence de vapeurs et former des gaz hautement toxiques et irritants.
7. Ne pas chauffer des métaux munis d'un revêtement tels que l'acier galvanisé, plaqué au plomb ou au cadmium, à moins que le revêtement ne soit enlevé de la zone chauffée, que la zone soit bien ventilée et, si nécessaire, en portant un respirateur. Les revêtements et tous les métaux contenant ces éléments peuvent dégager des fumées toxiques s'ils sont chauffés.

1-1. Dangers supplémentaires de mise en route, de fonctionnement et d'entretien

LA CHUTE DE MATERIEL peut provoquer des blessures personnelles graves et endommager les équipements.

1. Utiliser la poignée et demander à une personne ayant la force physique nécessaire pour soulever l'appareil.
2. Déplacer l'appareil à l'aide d'un charriot ou d'un engin similaire.
3. Pour les appareils sans poignée utiliser un équipement d'une capacité appropriée pour soulever l'appareil.
4. En utilisant des fourches de levage pour déplacer l'unité, s'assurer que les fourches sont suffisamment longues pour dépasser du côté opposé de l'appareil.

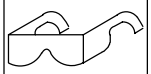

LA PROJECTION DE PIECES DE METAL ou DE COLLE peut provoquer des blessures aux yeux.

1. Porter des lunettes de protection avec des protections latérales.

DES ORGANES MOBILES peuvent provoquer des blessures.

1. S'abstenir de toucher des organes mobiles tels que des ventilateurs.
2. Maintenir fermés et fixement en place les portes, panneaux, recouvrements et dispositifs de protection.

DES CHAMPS MAGNETIQUES CREES PAR DES COURANTS ELEVES peuvent affecter le fonctionnement du stimulateur cardiaque.

1. Porteurs de stimulateur cardiaque, restez à distance.
2. Les porteurs d'un stimulateur cardiaque doivent d'abord consulter leur médecin avant de s'approcher des opérations de chauffage à induction.

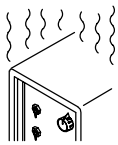

UNE UTILISATION INTENSIVE peut provoquer un SURCHAUFFEMENT DU MATERIEL.

1. Prévoir une période de refroidissement
2. Réduire le courant de sortie ou le facteur de marche avant de recommencer le chauffage.
3. Respecter le facteur de marche nominal.

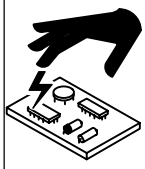

L'ELECTRICITE STATIQUE peut endommager les composants des tableaux électriques.

1. Etablir la connexion avec la barrette de terre avant de manipuler des cartes ou des pièces.
2. Utiliser des pochettes et des boîtes antistatiques pour stocker, déplacer ou expédier des cartes PC.

Il subsiste DU COURANT CONTINU IMPORTANT après la mise hors tension de l'alimentation électrique.

1. Avant de toucher des organes internes, arrêter la source électrique, débrancher l'alimentation, et décharger les condensateurs d'alimentation conformément aux instructions indiquées dans la partie maintenance.

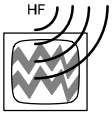

LE RAYONNEMENT HAUTE FREQUENCE peut provoquer des interférences avec les équipements de radio-navigation et de communication, les services de sécurité et les ordinateurs.

- Demander seulement à des personnes qualifiées familiarisées avec des équipements électroniques de faire fonctionner l'installation.
- L'utilisateur est tenu de faire corriger rapidement par un électricien qualifié les interférences résultant de l'installation.
- Si le FCC signale des interférences, arrêter immédiatement l'appareil.
- Effectuer régulièrement le contrôle et l'entretien de l'installation.
- Maintenir soigneusement fermés les portes et les panneaux des sources de haute fréquence.

1-2. Informations concernant les champs électro-magnétiques (Information EMF)

Considérations relatives au chauffage à induction et aux effets des champs électriques et magnétiques basse fréquence.

Le texte suivant est extrait des conclusions générales Département du Congrès U.S., Office of Technology Assessment, *Effets biologiques des champs magnétiques et électriques basse fréquence – Background Paper*, OTA-BP-E-53 (Washington, DC: U.S. Government Printing Office, May 1989): ". . . on dispose maintenant d'importantes découvertes scientifiques reposant sur des expériences effectuées dans le domaine cellulaire et des études réalisées sur des animaux et des personnes qui démontrent clairement que des champs magnétiques basse fréquence peuvent avoir une interaction et produire des changements dans les systèmes biologiques. Alors que la plus grande partie de cet ouvrage est d'une très grande qualité, les résultats sont complexes. La compréhension scientifique courante ne nous permet pas encore d'interpréter la preuve fournie dans un seul ouvrage cohérent. Il est encore plus frustrant de ne pas pouvoir tirer des conclusions définitives en ce qui concerne les problèmes de risque possible ou de proposer des recommandations scientifiques claires pour des stratégies à suivre en vue de minimiser ou de prévenir des risques potentiels."

Pour réduire les champs magnétiques sur le poste de travail, appliquer les procédures suivantes :

4. Disposer le câble de sortie d'un côté à distance de l'opérateur
5. Ne pas enrouler ou draper le câble électrique autour du corps.
6. Placer la source de courant et le câble le plus loin possible de l'opérateur.

En ce qui concerne les stimulateurs cardiaques

Les procédures ci-dessus concernent également les porteurs de stimulateur cardiaque. Consulter votre médecin pour un complément d'information.

PRINCIPALES NORMES DE SÉCURITÉ

Normes de sécurité et de santé, OSHA 29 CFR 1910, from Superintendent of Documents, U.S. Government Printing Office, Washington, D.C. 20402.

Code électrique national, NFPA Standard 70, from National Fire Protection Association, Batterymarch Park, Quincy, MA 02269.

Code électrique du Canada, partie 1, CSA Standard C22.1, from Canadian Standards Association, Standards Sales, 178 Rexdale Boulevard, Rexdale, Ontario, Canada M9W 1R3.

Safe Practices For Occupation And Educational Eye And Face Protection, ANSI Standard Z87.1, from American National Standards Institute, 1430 Broadway, New York, NY 10018.

SECTION 2 – SPECIFICATIONS

Type of Input Power	Output Frequency	Rated Output	Required Reflective Inductance	Input Amperes At Rated Output	KVA/KW Used At Rated Output	Overall Dimensions	Weight
Three-Phase, 230 Or 460 Volts AC, 50/60 Hz	10 To 50 kHz	10 kW At 30% Duty Cycle; Max 200 A (RMS), 350 V (RMS)	5 to 30 µh	44 A At 230 V *0.6 A: 22 A At 460 V *0.3 A	17 kVA/12.6 kW *0.15 kVA/0.146 kW	Length: 19-1/2 in (495 mm) Width: 11-1/2 in (292 mm) Height: 11-3/4 in (298 mm)	Net: 65 lb (29.5 kg) Ship: 70 lb (31.8 kg)
*While idling							

SECTION 3 – INSTALLATION

⚠ WARNING

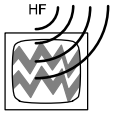

HIGH-FREQUENCY RADIATION can interfere with radio navigation, safety services, computers, and communications equipment.

- Have only qualified person familiar with electronic equipment perform this installation.
- The user is responsible for having a qualified electrician promptly correct any interference problem resulting from the installation.
- If notified by the FCC about interference, stop using the equipment at once.
- Have the installation regularly checked and maintained.
- Keep high-frequency source doors and panels tightly shut.

3-1. Connecting Head/Coil To Power Source

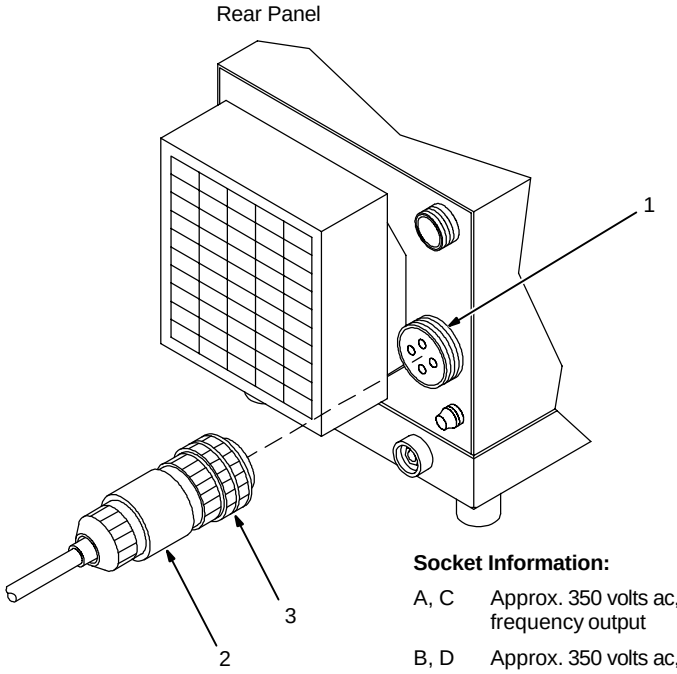

1 Output Receptacle RC15

2 Plug From Head/Coil

3 Threaded Collar

Receptacle RC15 is a 4-socket receptacle.

To connect to receptacle, align key-way, insert plug, and tighten threaded collar.

Socket Information:

A, C Approx. 350 volts ac, 10 to 50 kHz RMS high-frequency output

B, D Approx. 350 volts ac, 10 to 50 kHz RMS high-frequency output

802 663

3-2. Remote 14 Receptacle RC14 Information And Connection

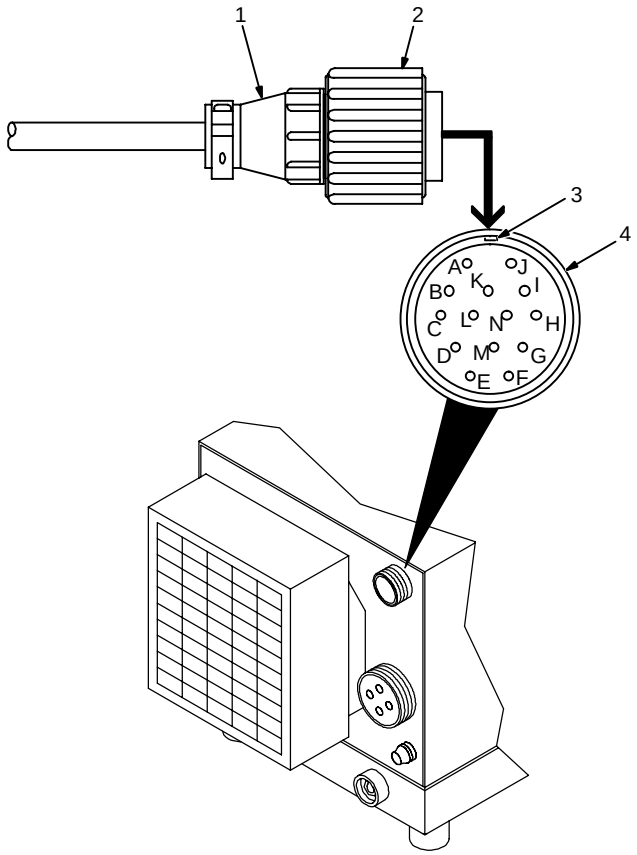

1 Plug
2 Threaded Collar
3 Keyway
4 Remote 14 Receptacle RC14 (See Section 3-3)

To connect to receptacle, align keyway, insert plug, and tighten threaded collar.

sb7.1* 3/93 - Ref. S-0004-A / Ref. S-0750 / Ref. 802 663

3-3. Remote 14 Socket Information

REMOTE 14		Socket	Socket Information
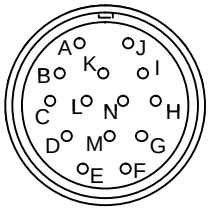	**Contactor**	A	+24 volts dc.
		B	Contact closure to A completes 24 volts dc contactor control circuit.
	Remote Output Control	C	Command reference; +10 volts dc.
		D	Control circuit common.
		E	Input command signal (potentiometer wiper or 0 to +10 volts dc).
		G	Not used.
	Power Source Fault	F,J	Absence of internal contact closure between F and J signals power source failure to remote control device.
	Remote Metering	H	Coil loss compensation value.
		I	Actual frequency output signal (1 volt/5 kHz).
		L	Average power output signal (1 volt/1 kW).
		M	Voltage output signal RMS (1 volt/50 volts).
		N	Current output signal RMS (1 volt/50 amperes).
		K	Chassis common.

3-4. Positioning Jumper Links

Turn Off unit Power switch, and disconnect input power.

Jumper links allow operation on different input voltages and are factory set for the highest input voltage.

Check input voltage available at site.

Remove wrapper to check jumper links.

1 Terminal Strip TE2

2 Input Voltage Jumper Link

3 Input Voltage Label

Four jumper links supplied. Look at jumper links and compare link position with label.

Move links to match input voltage. For example, use 230 volts position on label when 230 volts input power is available.

Reinstall wrapper or go on to Section 3-5.

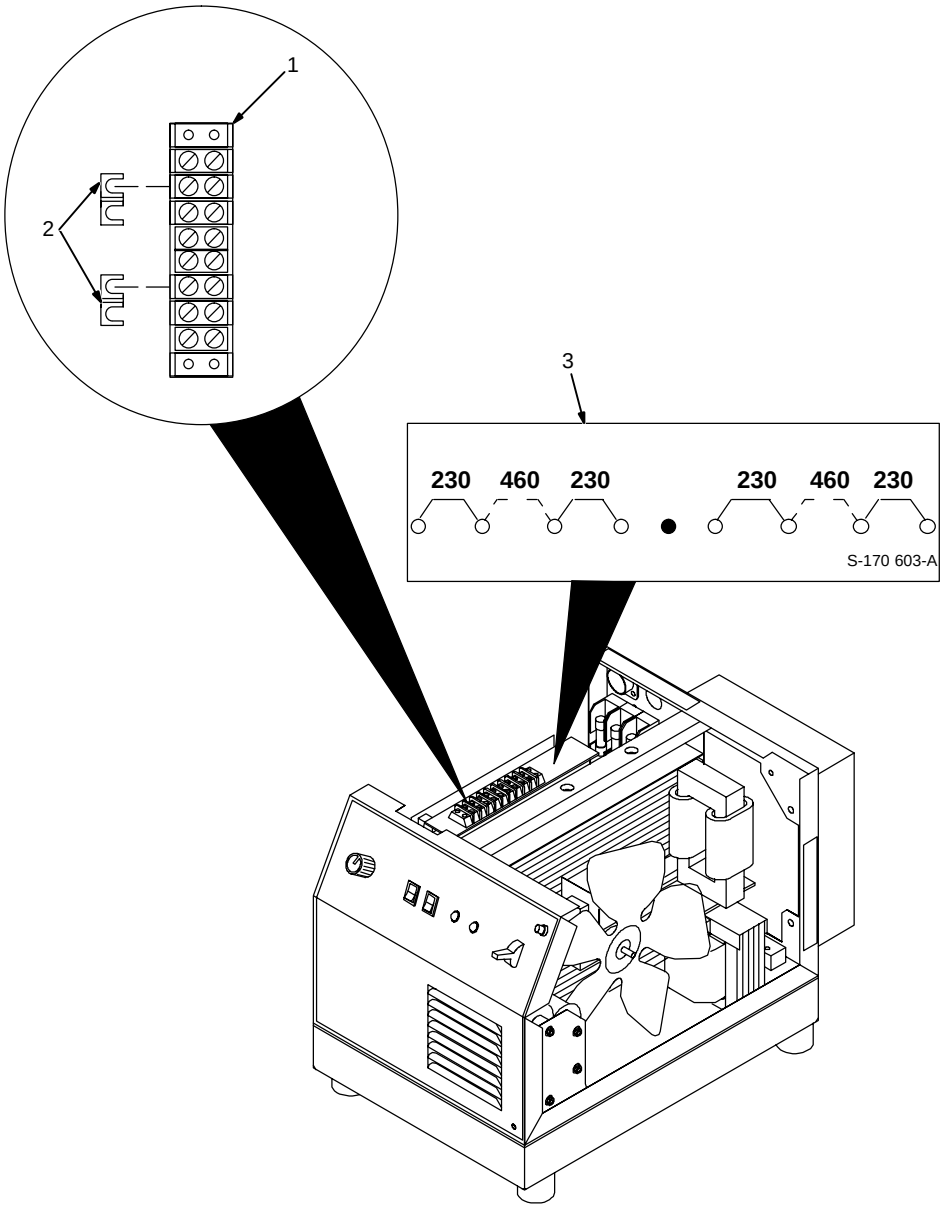

Tools Needed:

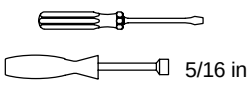

Ref. 802 664

3-5. Connecting Input Power

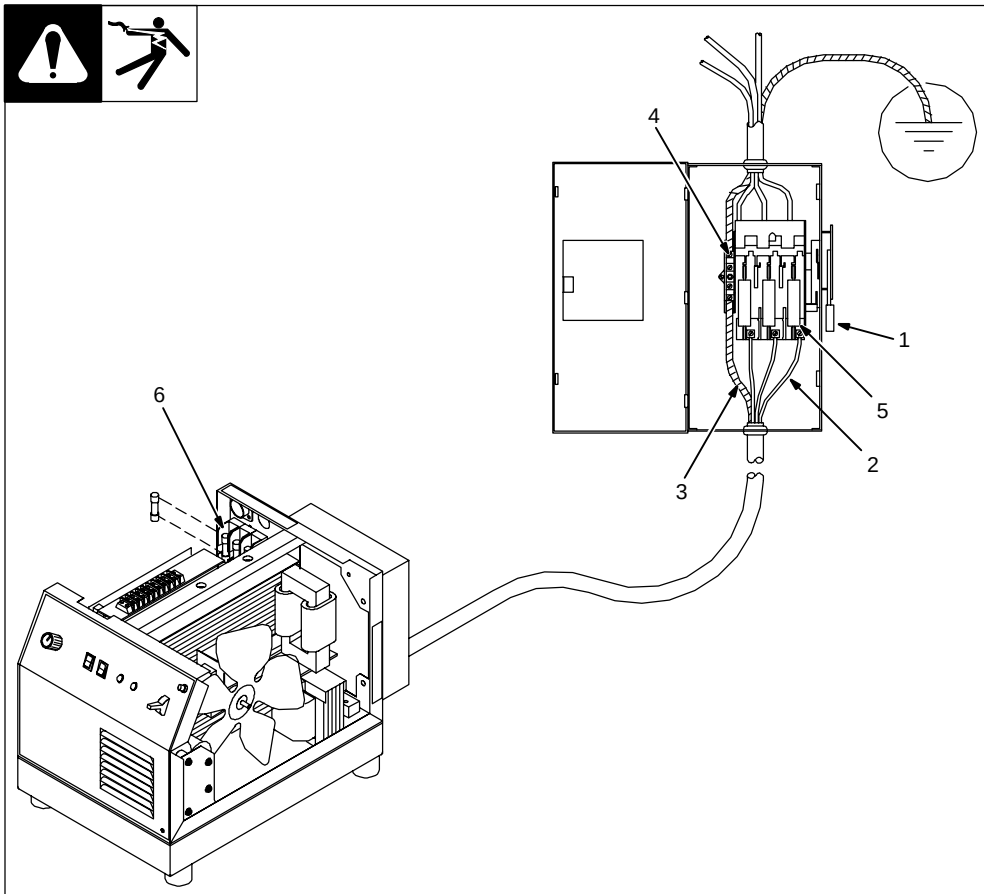

Have only qualified persons make this installation.

Remove wrapper.

1 Line Disconnect Device Of Proper Rating

Obtain and install line disconnect device.

2 Input Conductors

3 Grounding Conductor

Select size and length using Section 3-6. Conductor rating must comply with national, state, and local electrical codes.

4 Disconnect Device Ground Terminal

Install and connect grounding conductor and input conductors in conduit or equivalent to deenergized line disconnect device.

Connect grounding conductor first, then line input conductors.

Be sure grounding conductor goes to an earth ground.

Reinstall wrapper.

5 Overcurrent Protection

Select type and size using Section 3-6. Install into deenergized line disconnect device (fused disconnect switch shown).

6 Unit Fuse Block

Internal replacement fuses:

230 V – KTKR30*

460 V – FWC25A10F

Tools Needed:

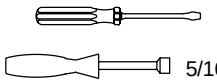

5/16 in

*Due to low duty cycle, fusing requirements can be derated for 230 V operation.

802 664

3-6. Electrical Service Guide

Input Voltage	230	460
Input Amperes At Rated Output	44	22
Max Recommended Standard Fuse Rating In Amperes [1] **Normal Operating [2]**	60	30
Min Input Conductor Size In AWG/Kcmil	10	14
Max Recommended Input Conductor Length In Feet (Meters)	100 (31)	159 (49)
Min Grounding Conductor Size In AWG/Kcmil	10	14

Reference: 1999 National Electrical Code (NEC)

1 Consult factory for circuit breaker applications.

2 “Normal Operating” (general purpose – no intentional delay) fuses are UL class “K5” (up to and including 60 amp), and UL class “H” (65 amp and above).

SECTION 4 – OPERATION

4-1. Controls

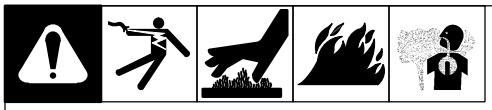

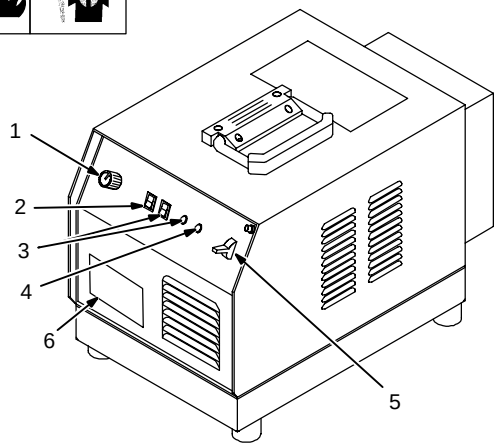

1 Power Adjust Control
2 Remote Power Control Switch
3 Ground Fault Test Switch And Ground Fault LED
4 Duty Cycle Limit LED
5 Power Switch
6 Rating Label Location

Ref. 802 662

4-2. Safety Equipment

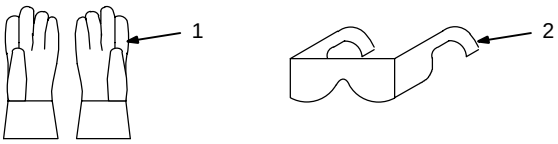

1 Insulating Gloves
2 Safety Glasses With Side Shields

Wear dry insulating gloves and safety glasses with side shields.

sb3.1* 10/91

4-3. Power Adjust Control

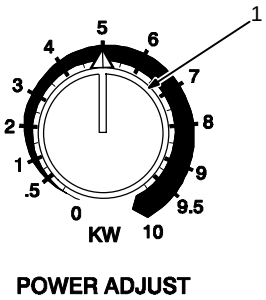

1 Power Adjust Control

Use control to select power between the minimum and maximum output of the power source. The numbers around the control are in kilowatts (kW).

Ref. 189 500

4-4. Remote Power Control Switch

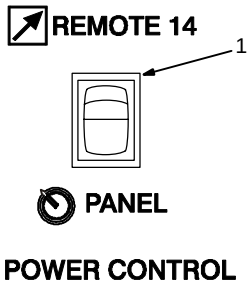

1 Remote Power Control Switch

Use switch to select way of controlling unit output.

For front panel control, place switch in Panel position.

For remote control, place switch in Remote 14 position. Connect controller or pendant control to Remote 14 receptacle (see Section 3-2).

4-5. Power Switch

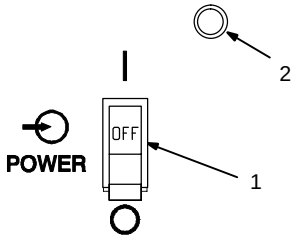

1 Power Switch

2 Pilot Light

Use switch to turn unit, fan motor, and pilot light On and Off.

Unit is ready to heat 10 seconds after Power switch is placed in On position.

4-6. Ground Fault Test Switch And Indicator Light

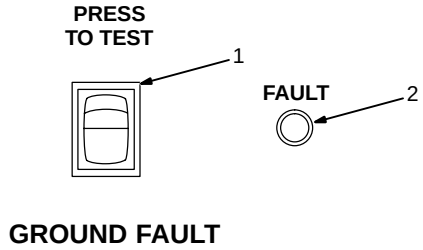

1 Ground Fault Test Switch

Use switch to test ground fault circuitry.

2 Ground Fault Indicator Light

Light comes on when circuitry detects a ground fault.

4-7. Duty Cycle Limit LED

1 Duty Cycle Limit LED

Indicates unit has exceeded 30% duty cycle at 10 kW output.

To restore output, turn off unit power for a minimum of 1 minute before energizing unit again (see Section 4-5).

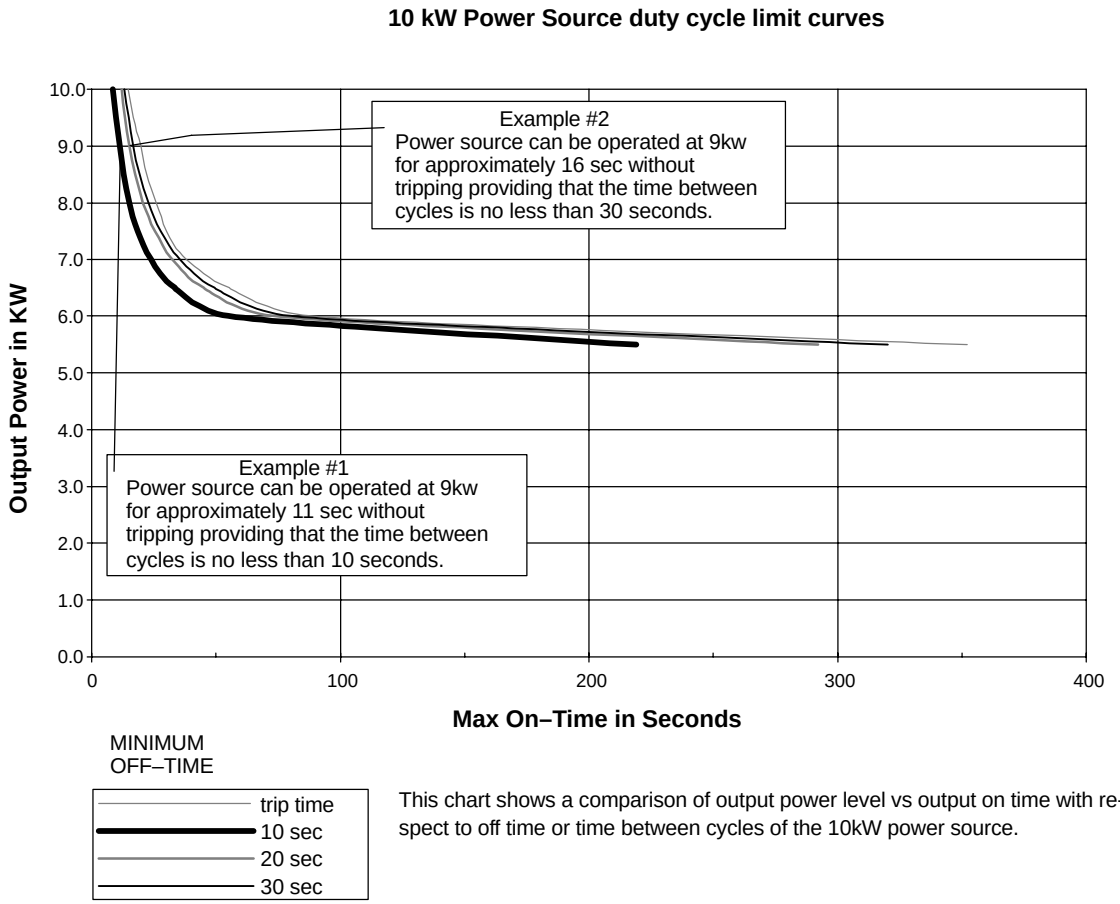

This chart shows a comparison of output power level vs output on time with respect to off time or time between cycles of the 10kW power source.

4-8. Sequence Of Induction Heating Process

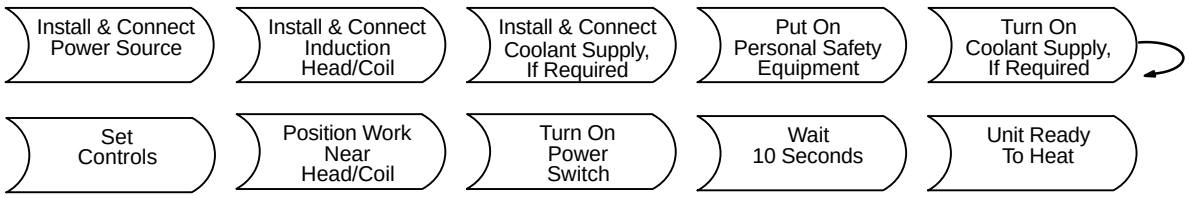

SECTION 5 – MAINTENANCE & TROUBLESHOOTING

5-1. Routine Maintenance

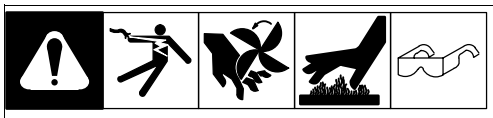

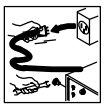

▲ **Disconnect power before maintaining.**

☞ *Maintain more often during severe conditions.*

3 Months

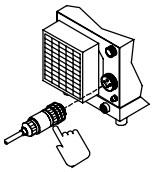

Clean And Tighten Output Connections

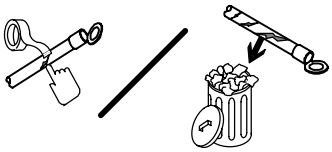

Repair Or Replace Cracked Output Cables

6 Months

Replace Damaged Or Unreadable Labels

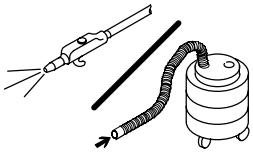

Blow Out Or Vacuum Inside

5-2. Overload Protection

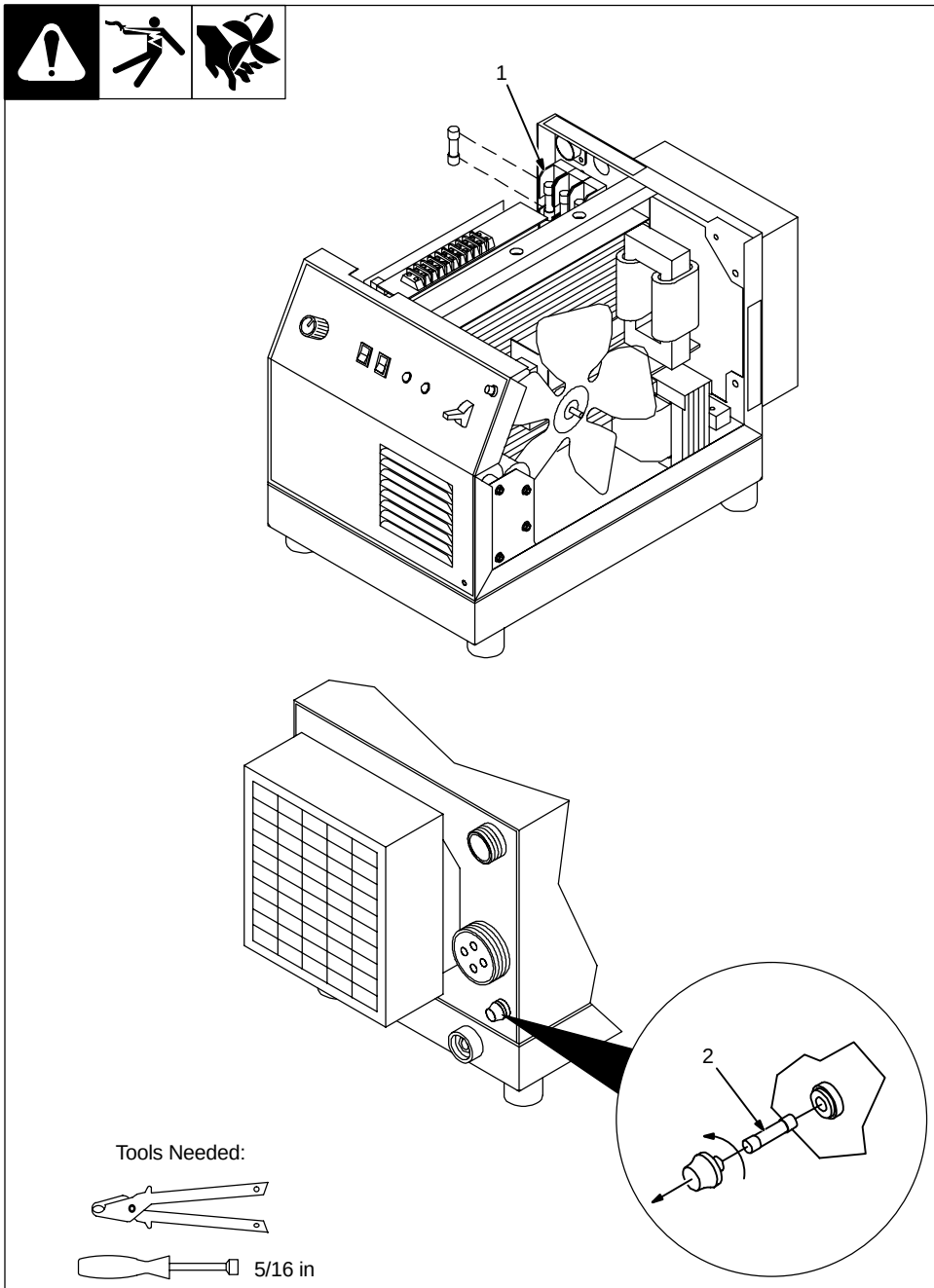

▲ **Turn Off and disconnect input power before checking fuses.**

1 Unit Fuse Block And Fuses F1, F2, And F3 (See Section 3-6 For Rating)

Fuses F1, F2, and F3 protect unit from overload. If fuse(s) opens, the power source shuts down.

Replace fuses as needed. Use proper tool when removing fuses.

Reinstall wrapper.

2 Fuse F4 (See Parts List For Rating)

Fuse F4 protects +24 volts dc circuit from overload. If fuse opens, +24 volts dc output at receptacle RC14 stops. Replace F4.

Ref. 802 664 / Ref. 802 663

5-3. Overheating Protection

Thermostat TP1 protects the unit from damage due to overheating. If main heat sink gets too hot, TP1 opens and output stops. The fan keeps running to cool the heat sink. Wait several minutes before trying to heat.

5-4. Automatic Shutdown Protection

This unit automatically shuts down upon sensing certain fault conditions, such as an out-of-range frequency condition, short circuit load condition, or an open circuit (no load) condition. The unit also has automatic voltage limiting and power ratio limiting, which limits the output power based on improper load impedance.

5-5. Ground Fault Protection

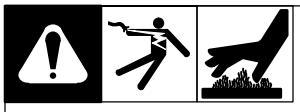

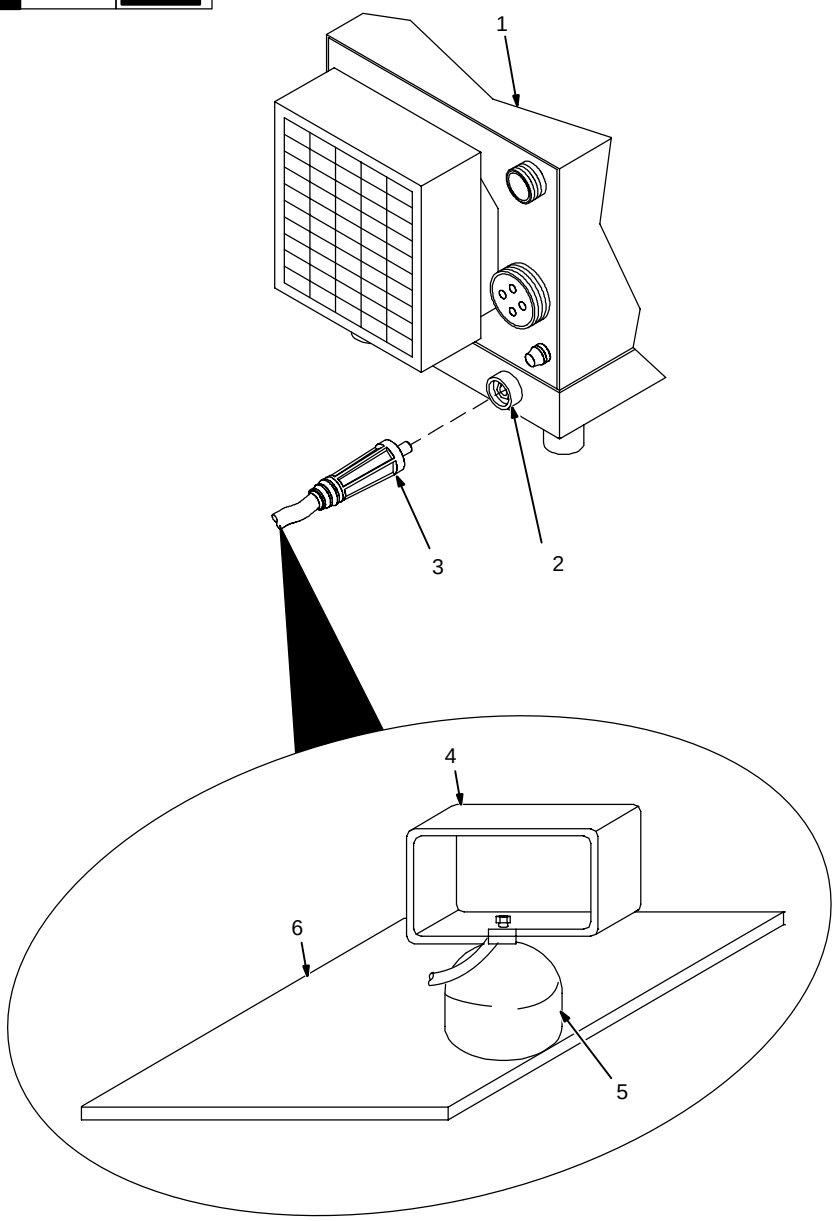

Ground fault protection circuitry automatically shuts down the power source output if a potentially hazardous condition exists at the heating device connected to the power source (e.g. insulation has broken down on a heating blanket causing the conductor to come into contact with the workpiece or a heating coil touches the workpiece causing a short in the output circuit).

The supplied ground lead must be connected between the workpiece and power source to provide proper ground fault protection from a short in the output circuit.

1 Power Source

2 Receptacle

3 Plug

To connect plug, align key with key-way, insert end into receptacle, and rotate plug until tight.

4 Handle

5 Magnet

6 Workpiece

Use handle to place magnet on the workpiece.

802 678 / Ref. 802 665

5-6. Safety Interlock Switch And Measuring Tuning Capacitor Voltage

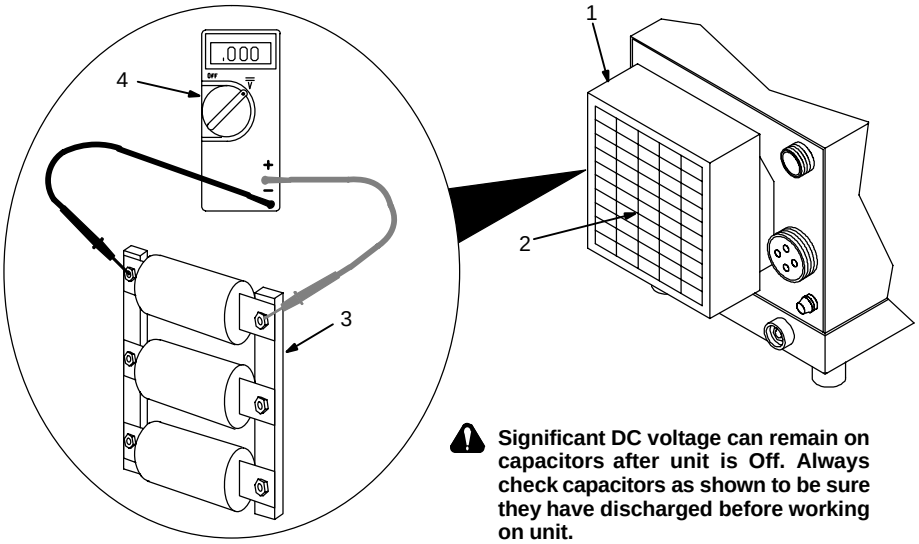

Significant DC voltage can remain on capacitors after unit is Off. Always check capacitors as shown to be sure they have discharged before working on unit.

1 Tuning Capacitor Cover

The cover prevents exposure of the tuning capacitors on the unit.

2 Safety Interlock Switch (Behind Cover)

The safety interlock switch prevents the contactor from energizing with the cover open.

To measure capacitor voltage, turn off power source and disconnect input power.

Open tuning capacitor cover.

3 Tuning Capacitor Assembly

4 Voltmeter

Measure voltage across busbars every 30 seconds until voltage is near 0 (zero) volts.

Proceed with job near tuning capacitor assembly. Close and secure cover when finished.

Tools Needed:

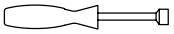

5/16 in

Ref. 802 663

5-7. Measuring Input Capacitor Voltage

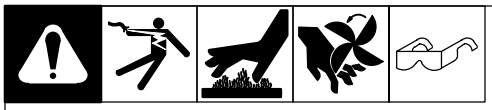

Significant DC voltage can remain on capacitors after unit is Off. Always check ALL capacitors as shown to be sure they have discharged before working on unit.

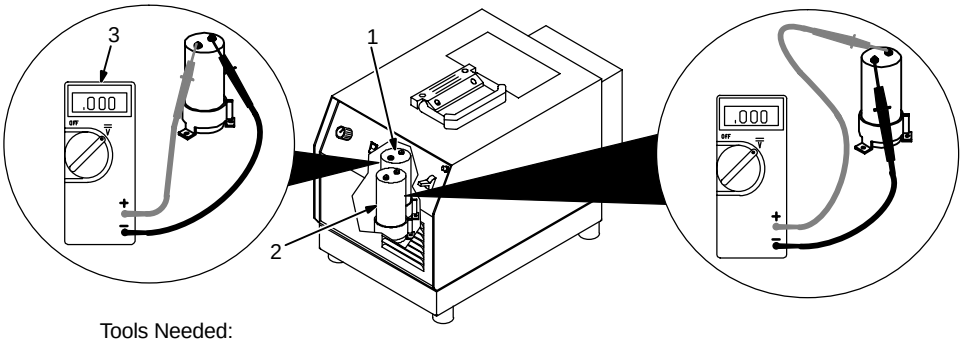

Turn Off power source and disconnect input power.

Remove wrapper.

1 Input Capacitor C1

2 Input Capacitor C2

3 Voltmeter

Check input capacitor(s).

Measure the dc voltage across the positive (+) and negative (–) terminals every 30 seconds until voltage is near 0 (zero) volts.

Proceed with job inside unit. Reinstall wrapper when finished.

Tools Needed:

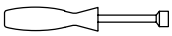

5/16 in

800 998-C

5-8. Troubleshooting

▲ **Disconnect power before troubleshooting**

Trouble	Remedy
No heat output.	Replace building line fuses, reset circuit breaker, or replace unit fuse(s) F1, F2, and/or F3 (see Section 3-5).
	Secure head/coil plug in power source receptacle (see Section 3-1).
	Check and replace Power switch if necessary.
	Connect power source to proper input voltage or check for low line voltage (see Sections 3-4 and 3-5).
No heat output; fan motor continues to run.	Tuning capacitor cover safety interlock switch open. Close tuning capacitor cover (see Section 5-6).
	Thermostat TP1 open (overheating). Allow fan to run; the thermostat will close when the unit has cooled (see Section 5-3).
Low heat output.	Check tuning of induction heating output system (see Section 5-9).
No +24 volts dc output at 14-socket receptacle.	Check fuse F4, and replace if necessary (see Section 5-2).

5-9. Tuning Chart

⚠ CAUTION

ENERGIZING CONTACTOR WITHOUT ALL 3 TUNING CAPACITORS IN OUTPUT CIRCUIT may damage power source.

- Consult factory before operating power source without all 3 tuning capacitors in output circuit.

Voltage*	Current (Amperage)*	Frequency (KHz)	Corrective Action
High	Low	Low	Lower inductance or decrease matching transformer turns ratio
High	Low	High	Add capacitance
High	Low	Mid-Range	Decrease matching transformer turns ratio and add capacitance
Low	High	Low	Lower capacitance
Low	High	High	Increase matching transformer turns ratio, or lower capacitance and increase inductance
Low	High	Mid-Range	Increase matching transformer turns ratio and lower capacitance

*High voltage > 300 V rms; Low voltage < 200 V rms; Operating current range: 0 to 200 A rms

SECTION 6 – ELECTRICAL DIAGRAM

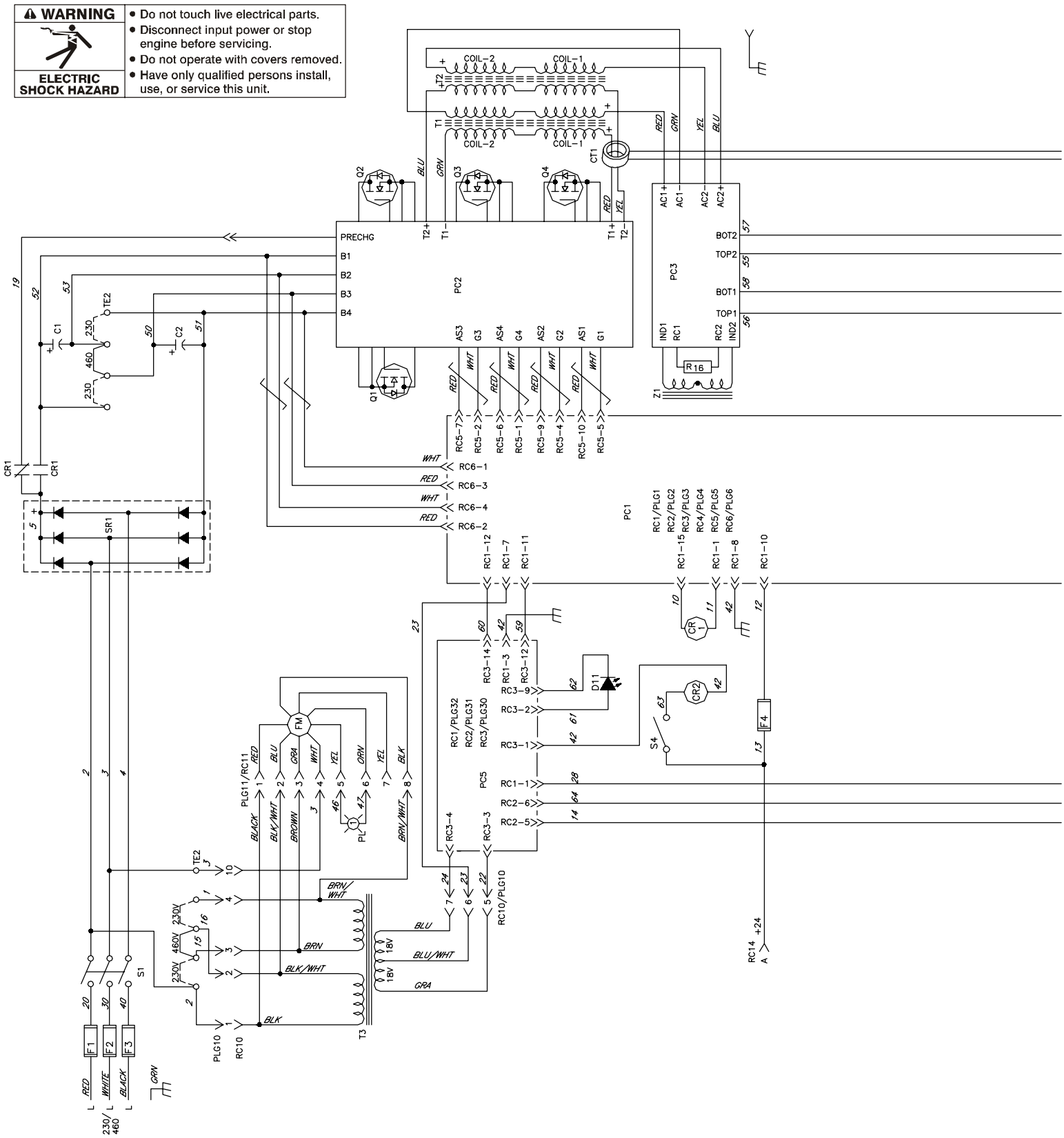

Figure 6-1. Circuit Diagram For Induction Heating Power Source

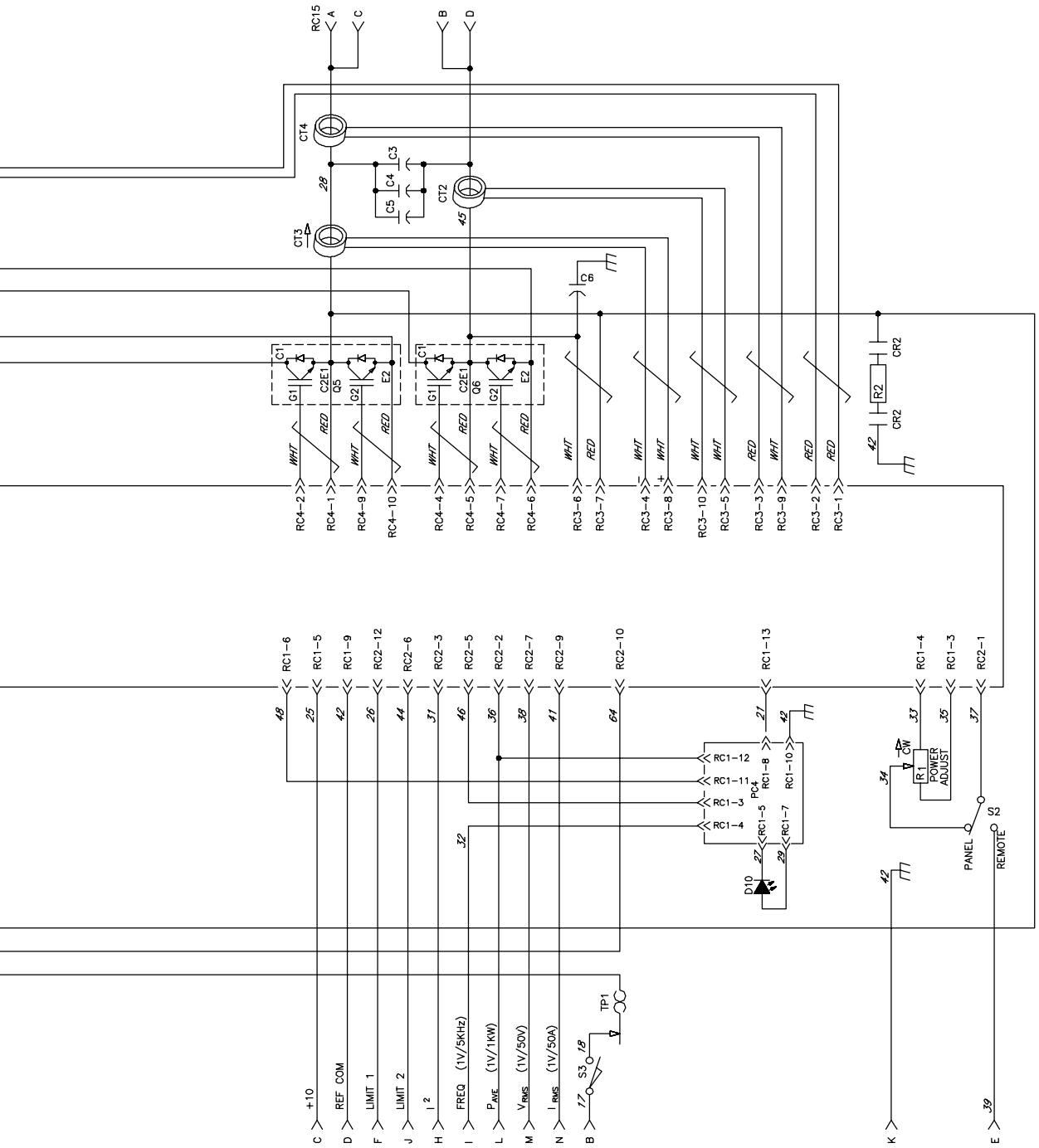
RC15
A
C
B
D
CT4
CT3
CT2
C3
C4
C5
C6
28
45
C1
G1
C2E1
Q5
G2
E2
Q6
RED
WHT
RC4-2
RC4-1
RC4-9
RC4-10
RC4-4
RC4-5
RC4-7
RC4-6
RC3-6
RC3-7
RC3-4
RC3-8
RC3-10
RC3-5
RC3-3
RC3-9
RC3-2
RC3-1
R2
CR2
42
RC1-6
RC1-5
RC1-9
RC2-12
RC2-6
RC2-3
RC2-5
RC2-2
RC2-7
RC2-9
RC2-10
RC1-13
RC1-4
RC1-3
RC2-1
48
25
42
26
44
31
46
36
38
41
64
21
33
35
37
RC1-12
RC1-11
RC1-3
RC1-4
PC4
RC1-8
RC1-10
RC1-5
RC1-7
27
29
32
D10
CW
R1
POWER ADJUST
34
S2
PANEL
REMOTE
+10
REF COM
LIMIT 1
LIMIT 2
I 2
FREQ (1V/5KHz)
P AVE (1V/1KW)
V RMS (1V/50V)
I RMS (1V/50A)
S3
18
17
TP1
C
D
F
J
H
I
L
M
N
B
K
E
39

199 924-A

☞ *Hardware is common and not available unless listed.*

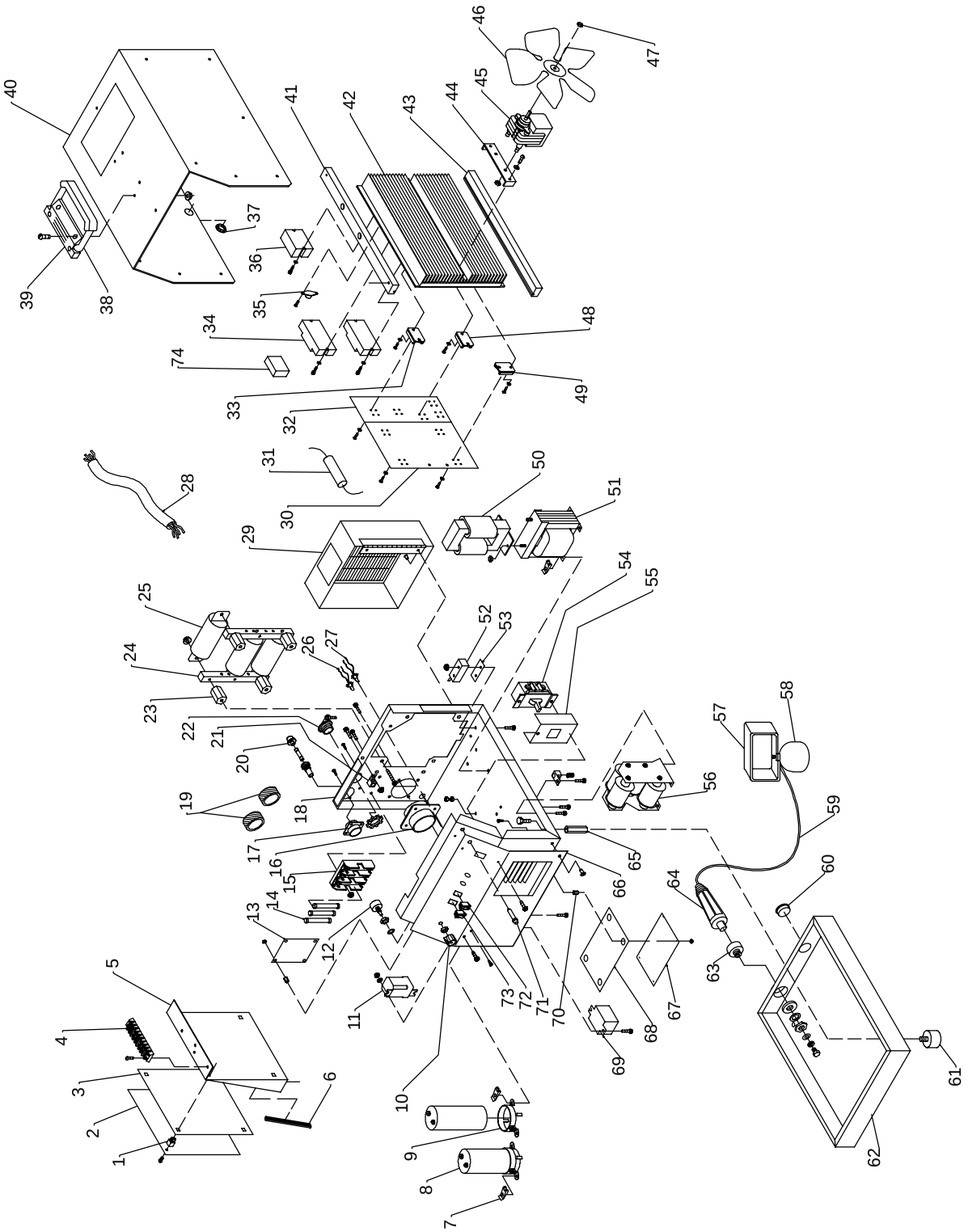

Figure 7-1. Complete Assembly

Item No.	Dia. Mkgs.	Part No.	Description	Quantity
			Figure 7-1. Complete Assembly	
1		141 690	GROMMET, scr No. 8/10 panel hole .281sq .197 high	4
2	PC1	199 455	CIRCUIT CARD, control	1
	PLG1	152 249	CONNECTOR & SOCKETS	1
	PLG2	158 720	CONNECTOR & SOCKETS	1
	PLG3-5	♦148 439	CONNECTOR & SOCKETS	3
	PLG6	164 899	CONNECTOR & SOCKETS	1
3		147 507	INSULATION, PC card	1
4	TE2	186 782	BLOCK, term 20A 9P	1
		186 783	LINK, jumper slotted 20A	4
5		145 453	BRACKET, mtg PC board	1
6		099 037	EDGE TRIM, style 62-1/16 black w/clips (order by ft)	1ft
7		136 190	NUT, 10-32 push on	8
8	C1,2	151 281	CAPACITOR, elctlt 1600uf 400VDC	2
		155 517	SCREW, set 10-32 x .750	4
9		006 426	CLAMP, capacitor	2
		148 297	NUT, 10-32 push on	2
10		171 007	KNOB, pointer 1.670dia x .250 ID	1
11	CR1	106 462	RELAY, encl 24VDC DPDT	1
12	R1	073 562	POTENTIOMETER, C sltd sft 1/T 2W 10K ohm	1
13	PC4	188 556	CIRCUIT CARD, duty cycle limit	1
14	F1-3	194 419	FUSE, crtg 25A 600V semiconductor (230VAC operation)	3
14	F1-3	193 027	FUSE, crtg 16A 600V semiconductor (460VAC operation)	3
15		186 778	BLOCK, fuse 600V 30A	1
16	RC15	167 723	CONNECTOR, circ 4skt rcpt	1
17	RC14	143 976	CONNECTOR w/SOCKETS	1
18		199 827	CASE SECTION, front/bottom/rear	1
		126 026	LABEL, warning electric shock can kill	3
19		174 048	TRANSFORMER, current (consisting of)	1
	CT1	166 578	TRANSFORMER, current	1
	CT2	162 854	TRANSFORMER, current	1
	CT3	161 309	TRANSFORMER, current	1
	CT4	168 522	TRANSFORMER, current	1
20		046 432	HOLDER, fuse mintr .250 x 1.250 panel mtg	1
	F4	012 643	FUSE, mintr gl slo-blo 1A 250V	1
21		145 743	LUG, univ w/scr 600V	1
22		010 916	CONNECTOR, clamp cable .750	1
23		026 947	STAND-OFF, insul .250-20 x 1.000 lg	4
		038 776	STUD, brs .250-20 x 1.500	4
24		167 887	BUS BAR, capacitors	2
25	C3-5	132 844	CAPACITOR, polyp film 2.1uf 1000VDC (used with 903 439)	3
25	C3-5	170 867	CAPACITOR, polyp film 1.5uf 1000VDC (used with 903 439-01-1, 903 439-01-3, 903 628-01-1, 903 628-01-2)	3
26	D10	159 522	LED, yellow 2.1V 20MA	1
27	D11	197 854	LED, red 2.1V 20 ma 45.0 mcd	1
28		200 408	CABLE, power	1
29		+170 414	COVER, capacitor	1
		127 363	LABEL, warning electric shock	1
30	PC2	169 810	CIRCUIT CARD, interconnecting	1
	PLG10	168 847	CONNECTOR & SOCKETS	1
31	R16	170 624	RESISTOR W/LEADS	1
32	PC3	169 814	CIRCUIT CARD, interconnecting	1
33	D5-7,9	190 531	DIODE, ultrafast soft recovery 60A 1000V	5
34	Q5,6	163 472	TRANSISTOR, IGBT module 75A 600V	2
35	TP1	006 334	THERMOSTAT, NC	1
36	SR1	131 828	RECTIFIER, integ 100A 1200V	1
37		024 103	BLANK, snap-in nyl .750mtg hole	1
38		126 416	HANDLE, molded	1
39		126 415	CLAMP, saddle	1

Item No.	Dia. Mkgs.	Part No.	Description	Quantity

Figure 7-1. Complete Assembly (Continued)

40		+167 886	WRAPPER	1
		147 876	LABEL, warning general precautionary	1
41		161 330	BAR, support heat sink	1
42		169 325	HEAT SINK, power module	1
		176 933	INSULATOR, heat sink	1
43		161 330	BAR, support heat sink	1
44		148 828	BRACKET, mtg fan motor	1
45	FM	170 692	MOTOR, fan	1
46		170 694	BLADE, fan 6.500 5wg 30deg	1
47		605 525	NUT, .312-24 stl elastic stop	1
48	D8	168 413	DIODE, fast recovery 60A 1000V	1
49	Q1-4	171 883	TRANSISTOR, mosfet 71A 500V	4
50	Z1	168 510	STABILIZER	1
51	T3	170 598	TRANSFORMER, control	1
52	S3	027 878	SWITCH, lim 15A 125/250VAC SPDT	1
53		199 830	INSULATOR, switch safety	1
54	S1	091 441	SWITCH, tgl 3PST 40A 600V	1
55		153 664	INSULATOR, switch power	1
56	T1,2	170 475	TRANSFORMER, pwr main	1
57		198 035	HANDLE	1
58		197 931	MAGNET, permanent	1
59		197 900	CABLE, work ground	1
60		193 329	COVER, blank	1
61		143 915	MOUNT, sgl stud 1.5dia x 1.000 lg .312-18	4
62		193 332	CASE SECTION, bottom filter enclosure	1
63		127 837	RECEPTACLE, tw lk insul fem	1
64		127 836	PLUG, tw lk insul male	1
65		193 506	STAND-OFF, .312-18 x 2.000 lg	4
66			NAMEPLATE, (order by model and serial number)	1
67		196 854	CIRCUIT CARD ASSY, ground fault control	1
68		199 829	INSULATOR, board ground fault	1
69		052 964	RELAY, encl 24VDC DPDT 10A/120VAC	1
70		097 132	STAND-OFF, NO 6-32 X .375 lg	8
71	PL1	170 599	LIGHT, ind wht lens 28V	1
72		199 672	SWITCH, rocker SPDT 4A 250VAC	1
73	S2	120 376	SWITCH, rocker SPDT 4A 250VAC	1
74	C6	201 717	CAPACITOR ASSY	1

♦PLG3 Included w/CT1-4/PLG5 Included w/PC2

+When ordering a component originally displaying a precautionary label, the label should also be ordered.

To maintain the factory original performance of your equipment, use only Manufacturer's Suggested Replacement Parts. Model and serial number required when ordering parts from your local distributor.

Warranty

Effective January 1, 2000
(Equipment with a serial number preface of “LA” or newer)

This limited warranty supersedes all previous manufacturers warranties and is exclusive with no other guarantees or warranties expressed or implied.

LIMITED WARRANTY – Subject to the terms and conditions below, warrants to its original retail purchaser that new equipment sold after the effective date of this limited warranty is free of defects in material and workmanship at the time it is shipped from factory. THIS WARRANTY IS EXPRESSLY IN LIEU OF ALL OTHER WARRANTIES, EXPRESS OR IMPLIED, INCLUDING THE WARRANTIES OF MERCHANTABILITY AND FITNESS.

Within the warranty periods listed below, manufacturer will repair or replace any warranted parts or components that fail due to such defects in material or workmanship. Manufacturer must be notified in writing within thirty (30) days of such defect or failure, at which time manufacturer will provide instructions on the warranty claim procedures to be followed.

Manufacturer shall honor warranty claims on warranted equipment listed below in the event of such a failure within the warranty time periods. All warranty time periods start on the date that the equipment was delivered to the original retail purchaser, or one year after the equipment is sent to the distributor.

1. 5 Years Parts – 3 Years Labor
   * Original main power rectifiers
2. 3 Years — Parts and Labor
   * Transformer/Rectifier Power Sources
   * Plasma Arc Cutting Power Sources
   * Semi-Automatic and Automatic Wire Feeders
   * Engine Driven Welding Generators
     (NOTE: Engines are warranted separately by the engine manufacturer.)
3. 1 Year — Parts and Labor
   * DS-2 Wire Feeder
   * Motor Driven Guns (w/exception of Spoolmate 185 & Spoolmate 250)
   * Process Controllers
   * Positioners and Controllers
   * Automatic Motion Devices
   * RFCS Foot Controls
   * Induction Heating Power Sources
   * Water Coolant Systems
   * HF Units
   * Grids
   * Spot Welders
   * Load Banks
   * Running Gear/Trailers
   * Field Options
     (NOTE: Field options are covered under the limited warranty for the remaining warranty period of the product they are installed in, or for a minimum of one year — whichever is greater.)
4. 6 Months — Batteries
5. 90 Days — Parts and Labor
   * MIG Guns/TIG Torches
   * Induction Heating Coils and Blankets
   * Plasma Cutting Torches
   * Remote Controls
   * Accessory Kits
   * Replacement Parts
   * Spoolmate 185 & Spoolmate 250
   * Canvas Covers

Limited Warranty shall not apply to:

1. **Consumable components; such as contact tips, cutting nozzles, contactors, relays, brushes, slip rings, or parts that fail due to normal wear.**
2. Items furnished by manufacturer, but manufactured by others, such as engines or trade accessories. These items are covered by the manufacturer’s warranty, if any.
3. Equipment that has been modified by any party other than manufacturer, or equipment that has been improperly installed, improperly operated or misused based upon industry standards, or equipment which has not had reasonable and necessary maintenance, or equipment which has been used for operation outside of the specifications for the equipment.

MANUFACTURER’S PRODUCTS ARE INTENDED FOR PURCHASE AND USE BY COMMERCIAL/INDUSTRIAL USERS AND PERSONS TRAINED AND EXPERIENCED IN THE USE AND MAINTENANCE OF WELDING EQUIPMENT.

In the event of a warranty claim covered by this warranty, the exclusive remedies shall be, at manufacturers option: (1) repair; or (2) replacement; or, where authorized in writing by manufacturer in appropriate cases, (3) the reasonable cost of repair or replacement at an authorized service station; or (4) payment of or credit for the purchase price (less reasonable depreciation based upon actual use) upon return of the goods at customer’s risk and expense. manufacturer’s option of repair or replacement will be F.O.B., Factory at Appleton, Wisconsin, or F.O.B. at an authorized service facility as determined by manufacturer. Therefore no compensation or reimbursement for transportation costs of any kind will be allowed.

TO THE EXTENT PERMITTED BY LAW, THE REMEDIES PROVIDED HEREIN ARE THE SOLE AND EXCLUSIVE REMEDIES. IN NO EVENT SHALL MANUFACTURER BE LIABLE FOR DIRECT, INDIRECT, SPECIAL, INCIDENTAL OR CONSEQUENTIAL DAMAGES (INCLUDING LOSS OF PROFIT), WHETHER BASED ON CONTRACT, TORT OR ANY OTHER LEGAL THEORY.

ANY EXPRESS WARRANTY NOT PROVIDED HEREIN AND ANY IMPLIED WARRANTY, GUARANTY OR REPRESENTATION AS TO PERFORMANCE, AND ANY REMEDY FOR BREACH OF CONTRACT TORT OR ANY OTHER LEGAL THEORY WHICH, BUT FOR THIS PROVISION, MIGHT ARISE BY IMPLICATION, OPERATION OF LAW, CUSTOM OF TRADE OR COURSE OF DEALING, INCLUDING ANY IMPLIED WARRANTY OF MERCHANTABILITY OR FITNESS FOR PARTICULAR PURPOSE, WITH RESPECT TO ANY AND ALL EQUIPMENT FURNISHED BY MANUFACTURER IS EXCLUDED AND DISCLAIMED BY MANUFACTURER.

Some states in the U.S.A. do not allow limitations of how long an implied warranty lasts, or the exclusion of incidental, indirect, special or consequential damages, so the above limitation or exclusion may not apply to you. This warranty provides specific legal rights, and other rights may be available, but may vary from state to state.

In Canada, legislation in some provinces provides for certain additional warranties or remedies other than as stated herein, and to the extent that they may not be waived, the limitations and exclusions set out above may not apply. This Limited Warranty provides specific legal rights, and other rights may be available, but may vary from province to province.

Owner's Record

Please complete and retain with your personal records.

Model Name Serial/Style Number

Purchase Date (Date which equipment was delivered to original customer.)

Distributor

Address

City

State Zip

Resources Available

Always provide Model Name and Serial/Style Number.

Contact your Distributor for:

- Welding Supplies and Consumables
- Options and Accessories
- Personal Safety Equipment
- Service and Repair
- Replacement Parts
- Owner's Manuals
- Circuit Diagrams

Contact the Delivering Carrier for:

File a claim for loss or damage during shipment.

For assistance in filing or settling claims, contact your distributor and/or equipment manufacturer's Transportation Department.

PRINTED IN USA 1/00