OM-267533M 2017-07

## Processes

Submerged Arc (SAW) Welding

## Description

Submerged Arc Controller For Automatic Welding

# SubArc System Digital Accessories

## CE

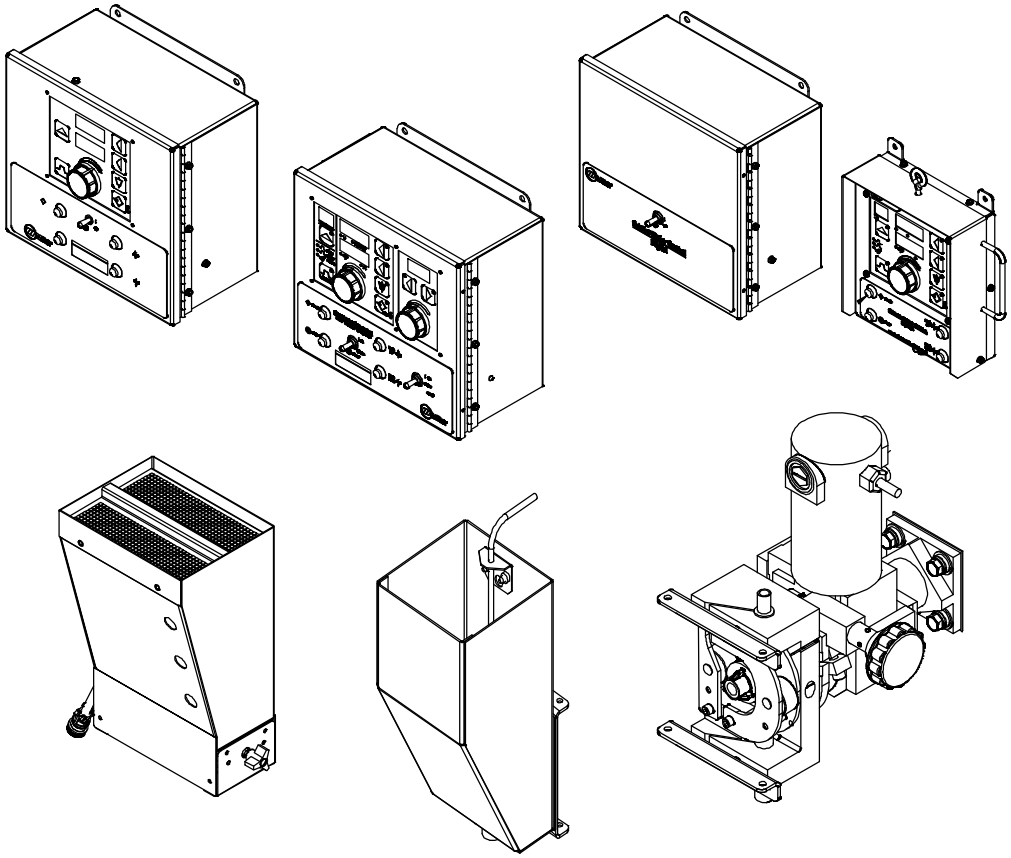

# OWNER'S MANUAL

File: SUBMERGED (SAW)

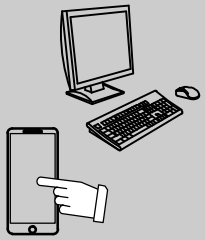

For product information, Owner's Manual translations, and more, visit

**www.MillerWelds.com**

# From Miller to You

*Thank you* and *congratulations* on choosing Miller. Now you can get the job done and get it done right. We know you don't have time to do it any other way.

That's why when Niels Miller first started building arc welders in 1929, he made sure his products offered long-lasting value and superior quality. Like you, his customers couldn't afford anything less. Miller products had to be more than the best they could be. They had to be the best you could buy.

Today, the people that build and sell Miller products continue the tradition. They're just as committed to providing equipment and service that meets the high standards of quality and value established in 1929.

This Owner's Manual is designed to help you get the most out of your Miller products. Please take time to read the Safety precautions. They will help you protect yourself against potential hazards on the worksite. We've made installation and operation quick and easy. With Miller you can count on years of reliable service with proper maintenance. And if for some reason the unit needs repair, there's a Troubleshooting section that will help you figure out what the problem is. The parts list will then help you to decide the exact part you may need to fix the problem. Warranty and service information for your particular model are also provided.

Certified System ™

ISO 9001 Quality

Miller is the first welding equipment manufacturer in the U.S.A. to be registered to the ISO 9001 Quality System Standard.

Miller Electric manufactures a full line of welders and welding related equipment. For information on other quality Miller products, contact your local Miller distributor to receive the latest full line catalog or individual specification sheets. **To locate your nearest distributor or service agency call 1-800-4-A-Miller, or visit us at www.MillerWelds.com on the web.**

TRUE BLUE® WARRANTY

Working as hard as you do – every power source from Miller is backed by the most hassle-free warranty in the business.

Miller®

# TABLE OF CONTENTS

# TABLE OF CONTENTS

# DECLARATION OF CONFORMITY

for European Community (CE marked) products.

**MILLER Electric Mfg. Co., 1635 Spencer Street, Appleton, WI 54914 U.S.A. declares that the product(s) identified in this declaration conform to the essential requirements and provisions of the stated Council Directive(s) and Standard(s).**

Product/Apparatus Identification:

| Product | Stock Number |
|---|---|
| SUBARC STRIP DRIVE 100 | 300939 |
| SUBARC STRIP DRIVE 100 W/BRKT | 300940 |
| SUBARC WIRE DRIVE 400 DIGITAL LOW VOLTAGE | 300938 |
| SUBARC WIRE DRIVE 400 FOR TRACTOR | 300938001 |
| SUBARC WIRE DRIVE 780 DIGITAL LOW VOLTAGE | 300941 |

Council Directives:

- 2014/35/EU Low voltage
- 2014/30/EU Electromagnetic compatibility
- 2011/65/EU Restriction of the use of certain hazardous substances in electrical and electronic equipment

Standards:

- IEC 60974-5: 2013 Arc welding equipment – Part 5: Wire feeders
- IEC 60974-10: 2014 Arc welding equipment – Part 10: Electromagnetic compatibility requirements

Signatory:

January 23, 2017

**David A. Werba**

MANAGER, PRODUCT DESIGN COMPLIANCE

Date of Declaration

268213B

# DECLARATION OF CONFORMITY

for European Community (CE marked) products.

**MILLER Electric Mfg. Co., 1635 Spencer Street, Appleton, WI 54914 U.S.A. declares that the product(s) identified in this declaration conform to the essential requirements and provisions of the stated Council Directive(s) and Standard(s).**

Product/Apparatus Identification:

| Product | Stock Number |
|---|---|
| SubArc Interface Digital | 300936 |
| SubArc Interface Analog | 300937 |
| SubArc Motor Control Digital | 301425 |
| SubArc Remote Pendant Digital | 301424 |
| SubArc Tractor Interface Digital | 301423 |

Council Directives:

- 2014/35/EU Low Voltage
- 2014/30/EU Electromagnetic Compatibility
- 2011/65/EU Restriction of the use of certain hazardous substances in electrical and electronic equipment

Standards:

- IEC 60974-5: 2013 Arc welding equipment – Part 5: Wire feeders
- IEC 60974-10:2014 Arc Welding Equipment – Part 10: Electromagnetic compatibility (EMC) requirements

Signatory:

March 10, 2017

**David A. Werba**

MANAGER, PRODUCT DESIGN COMPLIANCE

Date of Declaration

268181C

# SECTION 1 – SAFETY PRECAUTIONS - READ BEFORE USING



**Protect yourself and others from injury — read, follow, and save these important safety precautions and operating instructions.**

## 1-1. Symbol Usage

**DANGER! – Indicates a hazardous situation which, if not avoided, will result in death or serious injury. The possible hazards are shown in the adjoining symbols or explained in the text.**

**Indicates a hazardous situation which, if not avoided, could result in death or serious injury. The possible hazards are shown in the adjoining symbols or explained in the text.**

***NOTICE*** *– Indicates statements not related to personal injury.*

☞ *Indicates special instructions.*

This group of symbols means Warning! Watch Out! ELECTRIC SHOCK, MOVING PARTS, and HOT PARTS hazards. Consult symbols and related instructions below for necessary actions to avoid the hazards.

## 1-2. Arc Welding Hazards

**The symbols shown below are used throughout this manual to call attention to and identify possible hazards. When you see the symbol, watch out, and follow the related instructions to avoid the hazard. The safety information given below is only a summary of the more complete safety information found in the Safety Standards listed in Section 1-5. Read and follow all Safety Standards.**

**Only qualified persons should install, operate, maintain, and repair this unit.**

**During operation, keep everybody, especially children, away.**

### ELECTRIC SHOCK can kill.

Touching live electrical parts can cause fatal shocks or severe burns. The electrode and work circuit is electrically live whenever the output is on. The input power circuit and machine internal circuits are also live when power is on. In semiautomatic or automatic wire welding, the wire, wire reel, drive roll housing, and all metal parts touching the welding wire are electrically live. Incorrectly installed or improperly grounded equipment is a hazard.

- Do not touch live electrical parts.
- Wear dry, hole-free insulating gloves and body protection.
- Insulate yourself from work and ground using dry insulating mats or covers big enough to prevent any physical contact with the work or ground.
- Do not use AC output in damp areas, if movement is confined, or if there is a danger of falling.
- Use AC output ONLY if required for the welding process.
- If AC output is required, use remote output control if present on unit.
- Additional safety precautions are required when any of the following electrically hazardous conditions are present: in damp locations or while wearing wet clothing; on metal structures such as floors, gratings, or scaffolds; when in cramped positions such as sitting, kneeling, or lying; or when there is a high risk of unavoidable or accidental contact with the workpiece or ground. For these conditions, use the following equipment in order presented: 1) a semiautomatic DC constant voltage (wire) welder, 2) a DC manual (stick) welder, or 3) an AC welder with reduced open-circuit voltage. In most situations, use of a DC, constant voltage wire welder is recommended. And, do not work alone!
- Disconnect input power or stop engine before installing or servicing this equipment. Lockout/tagout input power according to OSHA 29 CFR 1910.147 (see Safety Standards).
- Properly install, ground, and operate this equipment according to its Owner's Manual and national, state, and local codes.
- Always verify the supply ground – check and be sure that input power cord ground wire is properly connected to ground terminal in disconnect box or that cord plug is connected to a properly grounded receptacle outlet.
- When making input connections, attach proper grounding conductor first – double-check connections.
- Keep cords dry, free of oil and grease, and protected from hot metal and sparks.
- Frequently inspect input power cord and ground conductor for damage or bare wiring – replace immediately if damaged – bare wiring can kill.
- Turn off all equipment when not in use.
- Do not use worn, damaged, undersized, or repaired cables.
- Do not drape cables over your body.
- If earth grounding of the workpiece is required, ground it directly with a separate cable.
- Do not touch electrode if you are in contact with the work, ground, or another electrode from a different machine.
- Do not touch electrode holders connected to two welding machines at the same time since double open-circuit voltage will be present.
- Use only well-maintained equipment. Repair or replace damaged parts at once. Maintain unit according to manual.
- Wear a safety harness if working above floor level.
- Keep all panels and covers securely in place.
- Clamp work cable with good metal-to-metal contact to workpiece or worktable as near the weld as practical.
- Insulate work clamp when not connected to workpiece to prevent contact with any metal object.
- Do not connect more than one electrode or work cable to any single weld output terminal. Disconnect cable for process not in use.
- Use GFCI protection when operating auxiliary equipment in damp or wet locations.

### SIGNIFICANT DC VOLTAGE exists in inverter welding power sources AFTER removal of input power.

- Turn Off inverter, disconnect input power, and discharge input capacitors according to instructions in Maintenance Section before touching any parts.

### HOT PARTS can burn.

- Do not touch hot parts bare handed.
- Allow cooling period before working on equipment.
- To handle hot parts, use proper tools and/or wear heavy, insulated welding gloves and clothing to prevent burns.

## FUMES AND GASES can be hazardous.

Welding produces fumes and gases. Breathing these fumes and gases can be hazardous to your health.

- Keep your head out of the fumes. Do not breathe the fumes.
- If inside, ventilate the area and/or use local forced ventilation at the arc to remove welding fumes and gases. The recommended way to determine adequate ventilation is to sample for the composition and quantity of fumes and gases to which personnel are exposed.
- If ventilation is poor, wear an approved air-supplied respirator.
- Read and understand the Safety Data Sheets (SDSs) and the manufacturer's instructions for adhesives, coatings, cleaners, consumables, coolants, degreasers, fluxes, and metals.
- Work in a confined space only if it is well ventilated, or while wearing an air-supplied respirator. Always have a trained watchperson nearby. Welding fumes and gases can displace air and lower the oxygen level causing injury or death. Be sure the breathing air is safe.
- Do not weld in locations near degreasing, cleaning, or spraying operations. The heat and rays of the arc can react with vapors to form highly toxic and irritating gases.
- Do not weld on coated metals, such as galvanized, lead, or cadmium plated steel, unless the coating is removed from the weld area, the area is well ventilated, and while wearing an air-supplied respirator. The coatings and any metals containing these elements can give off toxic fumes if welded.

## ARC RAYS can burn eyes and skin.

Arc rays from the welding process produce intense visible and invisible (ultraviolet and infrared) rays that can burn eyes and skin. Sparks fly off from the weld.

- Wear an approved welding helmet fitted with a proper shade of filter lenses to protect your face and eyes from arc rays and sparks when welding or watching (see ANSI Z49.1 and Z87.1 listed in Safety Standards).
- Wear approved safety glasses with side shields under your helmet.
- Use protective screens or barriers to protect others from flash, glare and sparks; warn others not to watch the arc.
- Wear body protection made from durable, flame–resistant material (leather, heavy cotton, wool). Body protection includes oil-free clothing such as leather gloves, heavy shirt, cuffless trousers, high shoes, and a cap.

## WELDING can cause fire or explosion.

Welding on closed containers, such as tanks, drums, or pipes, can cause them to blow up. Sparks can fly off from the welding arc. The flying sparks, hot workpiece, and hot equipment can cause fires and burns. Accidental contact of electrode to metal objects can cause sparks, explosion, overheating, or fire. Check and be sure the area is safe before doing any welding.

- Remove all flammables within 35 ft (10.7 m) of the welding arc. If this is not possible, tightly cover them with approved covers.
- Do not weld where flying sparks can strike flammable material.
- Protect yourself and others from flying sparks and hot metal.
- Be alert that welding sparks and hot materials from welding can easily go through small cracks and openings to adjacent areas.
- Watch for fire, and keep a fire extinguisher nearby.
- Be aware that welding on a ceiling, floor, bulkhead, or partition can cause fire on the hidden side.
- Do not weld on containers that have held combustibles, or on closed containers such as tanks, drums, or pipes unless they are properly prepared according to AWS F4.1 and AWS A6.0 (see Safety Standards).
- Do not weld where the atmosphere can contain flammable dust, gas, or liquid vapors (such as gasoline).
- Connect work cable to the work as close to the welding area as practical to prevent welding current from traveling long, possibly unknown paths and causing electric shock, sparks, and fire hazards.
- Do not use welder to thaw frozen pipes.
- Remove stick electrode from holder or cut off welding wire at contact tip when not in use.
- Wear body protection made from durable, flame–resistant material (leather, heavy cotton, wool). Body protection includes oil-free clothing such as leather gloves, heavy shirt, cuffless trousers, high shoes, and a cap.
- Remove any combustibles, such as a butane lighter or matches, from your person before doing any welding.
- After completion of work, inspect area to ensure it is free of sparks, glowing embers, and flames.
- Use only correct fuses or circuit breakers. Do not oversize or bypass them.
- Follow requirements in OSHA 1910.252 (a) (2) (iv) and NFPA 51B for hot work and have a fire watcher and extinguisher nearby.
- Read and understand the Safety Data Sheets (SDSs) and the manufacturer's instructions for adhesives, coatings, cleaners, consumables, coolants, degreasers, fluxes, and metals.

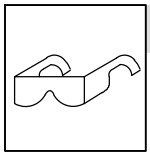

## FLYING METAL or DIRT can injure eyes.

- Welding, chipping, wire brushing, and grinding cause sparks and flying metal. As welds cool, they can throw off slag.
- Wear approved safety glasses with side shields even under your welding helmet.

## BUILDUP OF GAS can injure or kill.

- Shut off compressed gas supply when not in use.
- Always ventilate confined spaces or use approved air-supplied respirator.

## ELECTRIC AND MAGNETIC FIELDS (EMF) can affect Implanted Medical Devices.

- Wearers of Pacemakers and other Implanted Medical Devices should keep away.
- Implanted Medical Device wearers should consult their doctor and the device manufacturer before going near arc welding, spot welding, gouging, plasma arc cutting, or induction heating operations.

## NOISE can damage hearing.

Noise from some processes or equipment can damage hearing.

- Wear approved ear protection if noise level is high.

## CYLINDERS can explode if damaged.

Compressed gas cylinders contain gas under high pressure. If damaged, a cylinder can explode. Since gas cylinders are normally part of the welding process, be sure to treat them carefully.

- Protect compressed gas cylinders from excessive heat, mechanical shocks, physical damage, slag, open flames, sparks, and arcs.
- Install cylinders in an upright position by securing to a stationary support or cylinder rack to prevent falling or tipping.
- Keep cylinders away from any welding or other electrical circuits.
- Never drape a welding torch over a gas cylinder.
- Never allow a welding electrode to touch any cylinder.
- Never weld on a pressurized cylinder – explosion will result.
- Use only correct compressed gas cylinders, regulators, hoses, and fittings designed for the specific application; maintain them and associated parts in good condition.
- Turn face away from valve outlet when opening cylinder valve. Do not stand in front of or behind the regulator when opening the valve.
- Keep protective cap in place over valve except when cylinder is in use or connected for use.
- Use the right equipment, correct procedures, and sufficient number of persons to lift and move cylinders.
- Read and follow instructions on compressed gas cylinders, associated equipment, and Compressed Gas Association (CGA) publication P-1 listed in Safety Standards.

## 1-3. Additional Symbols For Installation, Operation, And Maintenance

### FIRE OR EXPLOSION hazard.

- Do not install or place unit on, over, or near combustible surfaces.
- Do not install unit near flammables.
- Do not overload building wiring – be sure power supply system is properly sized, rated, and protected to handle this unit.

### FALLING EQUIPMENT can injure.

- Use lifting eye to lift unit only, NOT running gear, gas cylinders, or any other accessories.
- Use equipment of adequate capacity to lift and support unit.
- If using lift forks to move unit, be sure forks are long enough to extend beyond opposite side of unit.
- Keep equipment (cables and cords) away from moving vehicles when working from an aerial location.
- Follow the guidelines in the Applications Manual for the Revised NIOSH Lifting Equation (Publication No. 94–110) when manually lifting heavy parts or equipment.

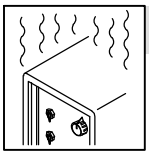

### OVERUSE can cause OVERHEATING

- Allow cooling period; follow rated duty cycle.
- Reduce current or reduce duty cycle before starting to weld again.
- Do not block or filter airflow to unit.

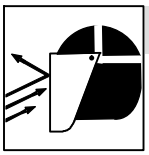

### FLYING SPARKS can injure.

- Wear a face shield to protect eyes and face.
- Shape tungsten electrode only on grinder with proper guards in a safe location wearing proper face, hand, and body protection.
- Sparks can cause fires — keep flammables away.

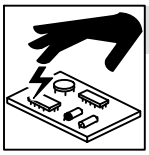

### STATIC (ESD) can damage PC boards.

- Put on grounded wrist strap BEFORE handling boards or parts.
- Use proper static-proof bags and boxes to store, move, or ship PC boards.

### MOVING PARTS can injure.

- Keep away from moving parts.
- Keep away from pinch points such as drive rolls.

### WELDING WIRE can injure.

- Do not press gun trigger until instructed to do so.
- Do not point gun toward any part of the body, other people, or any metal when threading welding wire.


### BATTERY EXPLOSION can injure.

- Do not use welder to charge batteries or jump start vehicles unless it has a battery charging feature designed for this purpose.

### MOVING PARTS can injure.

- Keep away from moving parts such as fans.
- Keep all doors, panels, covers, and guards closed and securely in place.
- Have only qualified persons remove doors, panels, covers, or guards for maintenance and troubleshooting as necessary.
- Reinstall doors, panels, covers, or guards when maintenance is finished and before reconnecting input power.

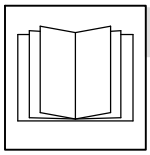

### READ INSTRUCTIONS.

- Read and follow all labels and the Owner's Manual carefully before installing, operating, or servicing unit. Read the safety information at the beginning of the manual and in each section.
- Use only genuine replacement parts from the manufacturer.
- Perform installation, maintenance, and service according to the Owner's Manuals, industry standards, and national, state, and local codes.

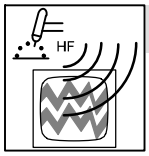


### H.F. RADIATION can cause interference.

- High-frequency (H.F.) can interfere with radio navigation, safety services, computers, and communications equipment.
- Have only qualified persons familiar with electronic equipment perform this installation.
- The user is responsible for having a qualified electrician promptly correct any interference problem resulting from the installation.
- If notified by the FCC about interference, stop using the equipment at once.
- Have the installation regularly checked and maintained.
- Keep high-frequency source doors and panels tightly shut, keep spark gaps at correct setting, and use grounding and shielding to minimize the possibility of interference.

### ARC WELDING can cause interference.

- Electromagnetic energy can interfere with sensitive electronic equipment such as computers and computer-driven equipment such as robots.
- Be sure all equipment in the welding area is electromagnetically compatible.
- To reduce possible interference, keep weld cables as short as possible, close together, and down low, such as on the floor.
- Locate welding operation 100 meters from any sensitive electronic equipment.
- Be sure this welding machine is installed and grounded according to this manual.
- If interference still occurs, the user must take extra measures such as moving the welding machine, using shielded cables, using line filters, or shielding the work area.

## 1-4. California Proposition 65 Warnings

**Welding or cutting equipment produces fumes or gases which contain chemicals known to the State of California to cause birth defects and, in some cases, cancer. (California Health & Safety Code Section 25249.5 et seq.)**

**This product contains chemicals, including lead, known to the state of California to cause cancer, birth defects, or other reproductive harm. *Wash hands after use.***

## 1-5. Principal Safety Standards

*Safety in Welding, Cutting, and Allied Processes,* ANSI Standard Z49.1, is available as a free download from the American Welding Society at http://www.aws.org or purchased from Global Engineering Documents (phone: 1-877-413-5184, website: www.global.ihs.com).

*Safe Practices for the Preparation of Containers and Piping for Welding and Cutting,* American Welding Society Standard AWS F4.1, from Global Engineering Documents (phone: 1-877-413-5184, website: www.global.ihs.com).

*Safe Practices for Welding and Cutting Containers that have Held Combustibles,* American Welding Society Standard AWS A6.0, from Global Engineering Documents (phone: 1-877-413-5184, website: www.global.ihs.com).

*National Electrical Code,* NFPA Standard 70, from National Fire Protection Association, Quincy, MA 02269 (phone: 1-800-344-3555, website: www.nfpa.org and www. sparky.org).

*Safe Handling of Compressed Gases in Cylinders,* CGA Pamphlet P-1, from Compressed Gas Association, 14501 George Carter Way, Suite 103, Chantilly, VA 20151 (phone: 703-788-2700, website:www.cga-net.com).

*Safety in Welding, Cutting, and Allied Processes,* CSA Standard W117.2, from Canadian Standards Association, Standards Sales, 5060 Spectrum Way, Suite 100, Mississauga, Ontario, Canada L4W 5NS (phone: 800-463-6727, website: www.csagroup.org).

*Safe Practice For Occupational And Educational Eye And Face Protection,* ANSI Standard Z87.1, from American National Standards Institute, 25 West 43rd Street, New York, NY 10036 (phone: 212-642-4900, website: www.ansi.org).

*Standard for Fire Prevention During Welding, Cutting, and Other Hot Work,* NFPA Standard 51B, from National Fire Protection Association, Quincy, MA 02269 (phone: 1-800-344-3555, website: www.nfpa.org).

OSHA, Occupational Safety and Health Standards for General Industry, Title 29, Code of Federal Regulations (CFR), Part 1910, Subpart Q, and Part 1926, Subpart J, from U.S. Government Printing Office, Superintendent of Documents, P.O. Box 371954, Pittsburgh, PA 15250-7954 (phone: 1-866-512-1800) (there are 10 OSHA Regional Offices—phone for Region 5, Chicago, is 312-353-2220, website: www.osha.gov).

*Applications Manual for the Revised NIOSH Lifting Equation*, The National Institute for Occupational Safety and Health (NIOSH), 1600 Clifton Rd, Atlanta, GA 30329-4027 (phone: 1-800-232-4636, website: www.cdc.gov/NIOSH).

## 1-6. EMF Information

Electric current flowing through any conductor causes localized electric and magnetic fields (EMF). The current from arc welding (and allied processes including spot welding, gouging, plasma arc cutting, and induction heating operations) creates an EMF field around the welding circuit. EMF fields can interfere with some medical implants, e.g. pacemakers. Protective measures for persons wearing medical implants have to be taken. For example, restrict access for passers–by or conduct individual risk assessment for welders. All welders should use the following procedures in order to minimize exposure to EMF fields from the welding circuit:

1. Keep cables close together by twisting or taping them, or using a cable cover.
2. Do not place your body between welding cables. Arrange cables to one side and away from the operator.
3. Do not coil or drape cables around your body.
4. Keep head and trunk as far away from the equipment in the welding circuit as possible.
5. Connect work clamp to workpiece as close to the weld as possible.
6. Do not work next to, sit or lean on the welding power source.
7. Do not weld whilst carrying the welding power source or wire feeder.

**About Implanted Medical Devices:**

Implanted Medical Device wearers should consult their doctor and the device manufacturer before performing or going near arc welding, spot welding, gouging, plasma arc cutting, or induction heating operations. If cleared by your doctor, then following the above procedures is recommended.

**Pour écarter les risques de blessure pour vous–même et pour autrui — lire, appliquer et ranger en lieu sûr ces consignes relatives aux précautions de sécurité et au mode opératoire.**

## 2-1. Symboles utilisés

**DANGER! – Indique une situation dangereuse qui si on l'évite pas peut donner la mort ou des blessures graves. Les dangers possibles sont montrés par les symboles joints ou sont expliqués dans le texte.**

**Indique une situation dangereuse qui si on l'évite pas peut donner la mort ou des blessures graves. Les dangers possibles sont montrés par les symboles joints ou sont expliqués dans le texte.**

***AVIS*** *– Indique des déclarations pas en relation avec des blessures personnelles.*

☞ *Indique des instructions spécifiques.*

Ce groupe de symboles veut dire Avertissement! Attention! DANGER DE CHOC ELECTRIQUE, PIECES EN MOUVEMENT, et PIECES CHAUDES. Consulter les symboles et les instructions ci-dessous y afférant pour les actions nécessaires afin d'éviter le danger.

## 2-2. Dangers relatifs au soudage à l'arc

**Les symboles représentés ci-dessous sont utilisés dans ce manuel pour attirer l'attention et identifier les dangers possibles. En présence de l'un de ces symboles, prendre garde et suivre les instructions afférentes pour éviter tout risque. Les instructions en matière de sécurité indiquées ci-dessous ne constituent qu'un sommaire des instructions de sécurité plus complètes fournies dans les normes de sécurité énumérées dans la Section 2-5. Lire et observer toutes les normes de sécurité.**

**Seul un personnel qualifié est autorisé à installer, faire fonctionner, entretenir et réparer cet appareil.**

**Pendant le fonctionnement, maintenir à distance toutes les personnes, notamment les enfants de l'appareil.**

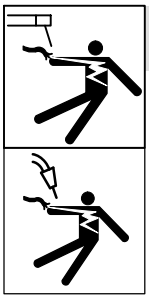

### UNE DÉCHARGE ÉLECTRIQUE peut entraîner la mort.

Le contact d'organes électriques sous tension peut provoquer des accidents mortels ou des brûlures graves. Le circuit de l'électrode et de la pièce est sous tension lorsque le courant est délivré à la sortie. Le circuit d'alimentation et les circuits internes de la machine sont également sous tension lorsque l'alimentation est sur Marche. Dans le mode de soudage avec du fil, le fil, le dérouleur, le bloc de commande du rouleau et toutes les parties métalliques en contact avec le fil sont sous tension électrique. Un équipement installé ou mis à la terre de manière incorrecte ou impropre constitue un danger.

- Ne pas toucher aux pièces électriques sous tension.
- Porter des gants isolants et des vêtements de protection secs et sans trous.
- S'isoler de la pièce à couper et du sol en utilisant des housses ou des tapis assez grands afin d'éviter tout contact physique avec la pièce à couper ou le sol.
- Ne pas se servir de source électrique à courant électrique dans les zones humides, dans les endroits confinés ou là où on risque de tomber.
- Se servir d'une source électrique à courant électrique UNIQUEMENT si le procédé de soudage le demande.
- Si l'utilisation d'une source électrique à courant électrique s'avère nécessaire, se servir de la fonction de télécommande si l'appareil en est équipé.
- D'autres consignes de sécurité sont nécessaires dans les conditions suivantes : risques électriques dans un environnement humide ou si l'on porte des vêtements mouillés ; sur des structures métalliques telles que sols, grilles ou échafaudages ; en position coincée comme assise, à genoux ou couchée ; ou s'il y a un risque élevé de contact inévitable ou accidentel avec la pièce à souder ou le sol. Dans ces conditions, utiliser les équipements suivants, dans l'ordre indiqué : 1) un poste à souder DC à tension constante (à fil), 2) un poste à souder DC manuel (électrode) ou 3) un poste à souder AC à tension à vide réduite. Dans la plupart des situations, l'utilisation d'un poste à souder DC à fil à tension constante est recommandée. En outre, ne pas travailler seul !
- Couper l'alimentation ou arrêter le moteur avant de procéder à l'installation, à la réparation ou à l'entretien de l'appareil. Déverrouiller l'alimentation selon la norme OSHA 29 CFR 1910.147 (voir normes de sécurité).
- Installez, mettez à la terre et utilisez correctement cet équipement conformément à son Manuel d'Utilisation et aux réglementations nationales, gouvernementales et locales.
- Toujours vérifier la terre du cordon d'alimentation. Vérifier et s'assurer que le fil de terre du cordon d'alimentation est bien raccordé à la borne de terre du sectionneur ou que la fiche du cordon est raccordée à une prise correctement mise à la terre.
- En effectuant les raccordements d'entrée, fixer d'abord le conducteur de mise à la terre approprié et contre-vérifier les connexions.
- Les câbles doivent être exempts d'humidité, d'huile et de graisse; protégez–les contre les étincelles et les pièces métalliques chaudes.
- Vérifier fréquemment le cordon d'alimentation et le conducteur de mise à la terre afin de s'assurer qu'il n'est pas altéré ou dénudé –, le remplacer immédiatement s'il l'est –. Un fil dénudé peut entraîner la mort.
- L'équipement doit être hors tension lorsqu'il n'est pas utilisé.
- Ne pas utiliser des câbles usés, endommagés, de grosseur insuffisante ou mal épissés.
- Ne pas enrouler les câbles autour du corps.
- Si la pièce soudée doit être mise à la terre, le faire directement avec un câble distinct.
- Ne pas toucher l'électrode quand on est en contact avec la pièce, la terre ou une électrode provenant d'une autre machine.
- Ne pas toucher des porte électrodes connectés à deux machines en même temps à cause de la présence d'une tension à vide doublée.
- N'utiliser qu'un matériel en bon état. Réparer ou remplacer sur-le-champ les pièces endommagées. Entretenir l'appareil conformément à ce manuel.
- Porter un harnais de sécurité si l'on doit travailler au-dessus du sol.
- S'assurer que tous les panneaux et couvercles sont correctement en place.
- Fixer le câble de retour de façon à obtenir un bon contact métal-métal avec la pièce à souder ou la table de travail, le plus près possible de la soudure.
- Isoler la pince de masse quand pas mis à la pièce pour éviter le contact avec tout objet métallique.
- Ne pas raccorder plus d'une électrode ou plus d'un câble de masse à une même borne de sortie de soudage. Débrancher le câble pour le procédé non utilisé.
- Utiliser une protection différentielle lors de l'utilisation d'un équipement auxiliaire dans des endroits humides ou mouillés.

### Il reste une TENSION DC NON NÉGLIGEABLE dans les sources de soudage onduleur UNE FOIS l'alimentation coupée.

- Arrêter les convertisseurs, débrancher le courant électrique et décharger les condensateurs d'alimentation selon les instructions indiquées dans la partie Entretien avant de toucher les pièces.

## LES PIÈCES CHAUDES peuvent provoquer des brûlures.

- Ne pas toucher à mains nues les parties chaudes.
- Prévoir une période de refroidissement avant de travailler à l'équipement.

- Ne pas toucher aux pièces chaudes, utiliser les outils recommandés et porter des gants de soudage et des vêtements épais pour éviter les brûlures.

## LES FUMÉES ET LES GAZ peuvent être dangereux.

Le soudage génère des fumées et des gaz. Leur inhalation peut être dangereux pour votre santé.

- Eloigner votre tête des fumées. Ne pas respirer les fumées.
- À l'intérieur, ventiler la zone et/ou utiliser une ventilation forcée au niveau de l'arc pour l'évacuation des fumées et des gaz de soudage. Pour déterminer la bonne ventilation, il est recommandé de procéder à un prélèvement pour la composition et la quantité de fumées et de gaz auxquels est exposé le personnel.
- Si la ventilation est médiocre, porter un respirateur anti-vapeurs approuvé.
- Lire et comprendre les fiches de données de sécurité et les instructions du fabricant concernant les adhésifs, les revêtements, les nettoyants, les consommables, les produits de refroidissement, les dégraisseurs, les flux et les métaux.
- Travailler dans un espace fermé seulement s'il est bien ventilé ou en portant un respirateur à alimentation d'air. Demander toujours à un surveillant dûment formé de se tenir à proximité. Des fumées et des gaz de soudage peuvent déplacer l'air et abaisser le niveau d'oxygène provoquant des blessures ou des accidents mortels. S'assurer que l'air de respiration ne présente aucun danger.
- Ne pas souder dans des endroits situés à proximité d'opérations de dégraissage, de nettoyage ou de pulvérisation. La chaleur et les rayons de l'arc peuvent réagir en présence de vapeurs et former des gaz hautement toxiques et irritants.
- Ne pas souder des métaux munis d'un revêtement, tels que l'acier galvanisé, plaqué en plomb ou au cadmium à moins que le revêtement n'ait été enlevé dans la zone de soudure, que l'endroit soit bien ventilé, et en portant un respirateur à alimentation d'air. Les revêtements et tous les métaux renfermant ces éléments peuvent dégager des fumées toxiques en cas de soudage.

## LES RAYONS DE L'ARC peuvent provoquer des brûlures dans les yeux et sur la peau.

Le rayonnement de l'arc du procédé de soudage génèr des rayons visibles et invisibles intenses (ultraviolets e infrarouges) susceptibles de provoquer des brûlures dans les yeux et sur l peau. Des étincelles sont projetées pendant le soudage.

- Porter un casque de soudage approuvé muni de verres filtrants approprié pour protéger visage et yeux pour protéger votre visage et vos yeux pendant le soudage ou pour regarder (voir ANSI Z49.1 et Z87.1 énuméré dans les normes de sécurité).
- Porter des lunettes de sécurité avec écrans latéraux même sous votre casque.
- Avoir recours à des écrans protecteurs ou à des rideaux pour protéger les autres contre les rayonnements les éblouissements et les étincelles ; prévenir toute personne sur les lieux de ne pas regarder l'arc.
- Porter un équipement de protection pour le corps fait d'un matériau résistant et ignifuge (cuir, coton robuste, laine). La protection du corps comporte des vêtements sans huile comme par ex. des gants de cuir, une chemise solide, des pantalons sans revers, des chaussures hautes et une casquette.

## LE SOUDAGE peut provoquer un incendie ou une explosion.

Le soudage effectué sur des conteneurs fermés tels que des réservoirs, tambours ou des conduites peut provoquer leur éclatement. Des étincelles peuvent être projetées de l'arc de soudure. La projection d'étincelles, des pièces chaudes et des équipements chauds peut provoquer des incendies et des brûlures. Le contact accidentel de l'électrode avec des objets métalliques peut provoquer des étincelles, une explosion, un surchauffement ou un incendie. Avant de commencer le soudage, vérifier et s'assurer que l'endroit ne présente pas de danger.

- Déplacer toutes les substances inflammables à une distance de 10,7 m de l'arc de soudage. En cas d'impossibilité les recouvrir soigneusement avec des protections homologués.
- Ne pas souder dans un endroit là où des étincelles peuvent tomber sur des substances inflammables.
- Se protéger et d'autres personnes de la projection d'étincelles et de métal chaud.
- Des étincelles et des matériaux chauds du soudage peuvent facilement passer dans d'autres zones en traversant de petites fissures et des ouvertures.
- Surveiller tout déclenchement d'incendie et tenir un extincteur à proximité.
- Le soudage effectué sur un plafond, plancher, paroi ou séparation peut déclencher un incendie de l'autre côté.
- Ne pas effectuer le soudage sur des conteneurs fermés tels que des réservoirs, tambours, ou conduites, à moins qu'ils n'aient été préparés correctement conformément à AWS F4.1 et AWS A6.0 (voir les Normes de Sécurité).
- Ne pas souder là où l'air ambiant pourrait contenir des poussières, gaz ou émanations inflammables (vapeur d'essence, par exemple).
- Brancher le câble de masse sur la pièce le plus près possible de la zone de soudage pour éviter le transport du courant sur une longue distance par des chemins inconnus éventuels en provoquant des risques d'électrocution, d'étincelles et d'incendie.
- Ne pas utiliser le poste de soudage pour dégeler des conduites gelées.
- En cas de non utilisation, enlever la baguette d'électrode du porte-électrode ou couper le fil à la pointe de contact.
- Porter un équipement de protection pour le corps fait d'un matériau résistant et ignifuge (cuir, coton robuste, laine). La protection du corps comporte des vêtements sans huile comme par ex. des gants de cuir, une chemise solide, des pantalons sans revers, des chaussures hautes et une casquette.
- Avant de souder, retirer toute substance combustible de vos poches telles qu'un allumeur au butane ou des allumettes.
- Une fois le travail achevé, assurez–vous qu'il ne reste aucune trace d'étincelles incandescentes ni de flammes.
- Utiliser exclusivement des fusibles ou coupe–circuits appropriés. Ne pas augmenter leur puissance; ne pas les ponter.
- Suivre les recommandations dans OSHA 1910.252(a)(2)(iv) et NFPA 51B pour les travaux à chaud et avoir de la surveillance et un extincteur à proximité.
- Lire et comprendre les fiches de données de sécurité et les instructions du fabricant concernant les adhésifs, les revêtements, les nettoyants, les consommables, les produits de refroidissement, les dégraisseurs, les flux et les métaux.

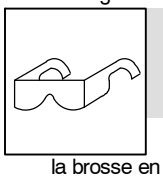

## DES PIECES DE METAL ou DES SALETES peuvent provoquer des blessures dans les yeux.

- Le soudage, l'écaillement, le passage de la pièce à la brosse en fil de fer, et le meulage génèrent des étincelles et des particules métalliques volantes. Pendant la période de refroidissement des soudures, elles risquent de projeter du laitier.
- Porter des lunettes de sécurité avec écrans latéraux ou un écran facial.

## LES ACCUMULATIONS DE GAZ risquent de provoquer des blessures ou même la mort.

- Fermer l'alimentation du gaz comprimé en cas de non utilisation.

- Veiller toujours à bien aérer les espaces confinés ou se servir d'un respirateur d'adduction d'air homologué.

## Les CHAMPS ÉLECTROMAGNÉTIQUES (CEM) peuvent affecter les implants médicaux.

- Les porteurs de stimulateurs cardiaques et autres implants médicaux doivent rester à distance.

- Les porteurs d'implants médicaux doivent consulter leur médecin et le fabricant du dispositif avant de s'approcher de la zone où se déroule du soudage à l'arc, du soudage par points, du gougeage, de la découpe plasma ou une opération de chauffage par induction.

### LE BRUIT peut endommager l'ouïe.

Le bruit des processus et des équipements peut affecter l'ouïe.

- Porter des protections approuvées pour les oreilles si le niveau sonore est trop élevé.

### LES BOUTEILLES peuvent exploser si elles sont endommagées.

Les bouteilles de gaz comprimé contiennent du gaz sous haute pression. Si une bouteille est endommagée, elle peut exploser. Du fait que les bouteilles de gaz font normalement partie du procédé de soudage, les manipuler avec précaution.

- Protéger les bouteilles de gaz comprimé d'une chaleur excessive, des chocs mécaniques, des dommages physiques, du laitier, des flammes ouvertes, des étincelles et des arcs.
- Placer les bouteilles debout en les fixant dans un support stationnaire ou dans un porte-bouteilles pour les empêcher de tomber ou de se renverser.
- Tenir les bouteilles éloignées des circuits de soudage ou autres circuits électriques.
- Ne jamais placer une torche de soudage sur une bouteille à gaz.
- Une électrode de soudage ne doit jamais entrer en contact avec une bouteille.
- Ne jamais souder une bouteille pressurisée – risque d'explosion.
- Utiliser seulement des bouteilles de gaz comprimé, régulateurs, tuyaux et raccords convenables pour cette application spécifique; les maintenir ainsi que les éléments associés en bon état.
- Tourner le dos à la sortie de vanne lors de l'ouverture de la vanne de la bouteille. Ne pas se tenir devant ou derrière le régulateur lors de l'ouverture de la vanne.
- Le couvercle du détendeur doit toujours être en place, sauf lorsque la bouteille est utilisée ou qu'elle est reliée pour usage ultérieur.
- Utiliser les équipements corrects, les bonnes procédures et suffisamment de personnes pour soulever et déplacer les bouteilles.
- Lire et suivre les instructions sur les bouteilles de gaz comprimé, l'équipement connexe et le dépliant P-1 de la CGA (Compressed Gas Association) mentionné dans les principales normes de sécurité.

## 2-3. Dangers supplémentaires en relation avec l'installation, le fonctionnement et la maintenance

### Risque D'INCENDIE OU D'EXPLOSION.

- Ne pas placer l'appareil sur, au-dessus ou à proximité de surfaces inflammables.
- Ne pas installer l'appareil à proximité de produits inflammables.
- Ne pas surcharger l'installation électrique – s'assurer que l'alimentation est correctement dimensionnée et protégée avant de mettre l'appareil en service.

### LA CHUTE DE L'ÉQUIPEMENT peut provoquer des blessures.

- Utiliser l'anneau de levage uniquement pour soulever l'appareil, NON PAS les chariots, les bouteilles de gaz ou tout autre accessoire.
- Utiliser un équipement de levage de capacité suffisante pour lever l'appareil.
- En utilisant des fourches de levage pour déplacer l'unité, s'assurer que les fourches sont suffisamment longues pour dépasser du côté opposé de l'appareil.
- Tenir l'équipement (câbles et cordons) à distance des véhicules mobiles lors de toute opération en hauteur.
- Suivre les consignes du Manuel des applications pour l'équation de levage NIOSH révisée (Publication Nº94–110) lors du levage manuelle de pièces ou équipements lourds.

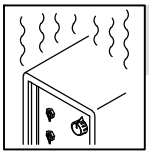

### L'EMPLOI EXCESSIF peut SURCHAUFFER L'ÉQUIPEMENT.

- Prévoir une période de refroidissement ; respecter le cycle opératoire nominal.
- Réduire le courant ou le facteur de marche avant de poursuivre le soudage.
- Ne pas obstruer les passages d'air du poste.

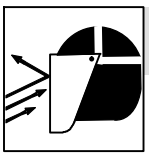

### LES ÉTINCELLES PROJETÉES peuvent provoquer des blessures.

- Porter un écran facial pour protéger le visage et les yeux.
- Affûter l'électrode au tungstène uniquement à la meuleuse dotée de protecteurs. Cette manœuvre est à exécuter dans un endroit sûr lorsque l'on porte l'équipement homologué de protection du visage, des mains et du corps.
- Les étincelles risquent de causer un incendie – éloigner toute substance inflammable.

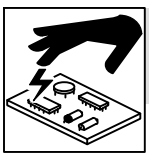

### LES CHARGES ÉLECTROSTATIQUES peuvent endommager les circuits imprimés.

- Établir la connexion avec la barrette de terre avant de manipuler des cartes ou des pièces.
- Utiliser des pochettes et des boîtes antistatiques pour stocker, déplacer ou expédier des cartes de circuits imprimes.

### Les PIÈCES MOBILES peuvent causer des blessures.

- Ne pas s'approcher des organes mobiles.
- Ne pas s'approcher des points de coincement tels que des rouleaux de commande.

### LES FILS DE SOUDAGE peuvent provoquer des blessures.

- Ne pas appuyer sur la gâchette avant d'en avoir reçu l'instruction.
- Ne pas diriger le pistolet vers soi, d'autres personnes ou toute pièce mécanique en engageant le fil de soudage.


### L'EXPLOSION DE LA BATTERIE peut provoquer des blessures.

- Ne pas utiliser l'appareil de soudage pour charger des batteries ou faire démarrer des véhicules à l'aide de câbles de démarrage, sauf si l'appareil dispose d'une fonctionnalité de charge de batterie destinée à cet usage.

### Les PIÈCES MOBILES peuvent causer des blessures.

- S'abstenir de toucher des organes mobiles tels que des ventilateurs.
- Maintenir fermés et verrouillés les portes, panneaux, recouvrements et dispositifs de protection.
- Lorsque cela est nécessaire pour des travaux d'entretien et de dépannage, faire retirer les portes, panneaux, recouvrements ou dispositifs de protection uniquement par du personnel qualifié.
- Remettre les portes, panneaux, recouvrements ou dispositifs de protection quand l'entretien est terminé et avant de rebrancher l'alimentation électrique.

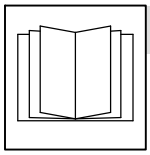

### LIRE LES INSTRUCTIONS.

- Lire et appliquer les instructions sur les étiquettes et le Mode d'emploi avant l'installation, l'utilisation ou l'entretien de l'appareil. Lire les informations de sécurité au début du manuel et dans chaque section.
- N'utiliser que les pièces de rechange recommandées par le constructeur.
- Effectuer l'installation, l'entretien et toute intervention selon les manuels d'utilisateurs, les normes nationales, provinciales et de l'industrie, ainsi que les codes municipaux.

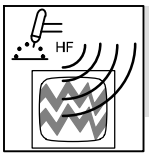


**LE RAYONNEMENT HAUTE FRÉQUENCE (H.F.) risque de provoquer des interférences.**

- Le rayonnement haute fréquence (H.F.) peut provoquer des interférences avec les équipements de radio−navigation et de communication, les services de sécurité et les ordinateurs.

- Demander seulement à des personnes qualifiées familiarisées avec des équipements électroniques de faire fonctionner l'installation.
- L'utilisateur est tenu de faire corriger rapidement par un électricien qualifié les interférences résultant de l'installation.
- Si le FCC signale des interférences, arrêter immédiatement l'appareil.
- Effectuer régulièrement le contrôle et l'entretien de l'installation.
- Maintenir soigneusement fermés les portes et les panneaux des sources de haute fréquence, maintenir les éclateurs à une distance correcte et utiliser une terre et un blindage pour réduire les interférences éventuelles.

**LE SOUDAGE À L'ARC risque de provoquer des interférences.**

- L'énergie électromagnétique risque de provoquer des interférences pour l'équipement électronique sensible tel que les ordinateurs et l'équipement commandé par ordinateur tel que les robots.

- Veiller à ce que tout l'équipement de la zone de soudage soit compatible électromagnétiquement.
- Pour réduire la possibilité d'interférence, maintenir les câbles de soudage aussi courts que possible, les grouper, et les poser aussi bas que possible (ex. par terre).
- Veiller à souder à une distance de 100 mètres de tout équipement électronique sensible.
- Veiller à ce que ce poste de soudage soit posé et mis à la terre conformément à ce mode d'emploi.
- En cas d'interférences après avoir pris les mesures précédentes, il incombe à l'utilisateur de prendre des mesures supplémentaires telles que le déplacement du poste, l'utilisation de câbles blindés, l'utilisation de filtres de ligne ou la pose de protecteurs dans la zone de travail.

## 2-4. Proposition californienne 65 Avertissements

⚠ **Les équipements de soudage et de coupage produisent des fumées et des gaz qui contiennent des produits chimiques dont l'État de Californie reconnaît qu'ils provoquent des malformations congénitales et, dans certains cas, des cancers. (Code de santé et de sécurité de Californie, chapitre 25249.5 et suivants)**

⚠ **Ce produit contient des produits chimiques, notamment du plomb, dont l'État de Californie reconnaît qu'ils provoquent des cancers, des malformations congénitales ou d'autres problèmes de procréation. *Se laver les mains après utilisation.***

## 2-5. Principales normes de sécurité

*Safety in Welding, Cutting, and Allied Processes,* ANSI Standard Z49.1, is available as a free download from the American Welding Society at http://www.aws.org or purchased from Global Engineering Documents (phone: 1-877-413-5184, website: www.global.ihs.com).

*Safe Practices for the Preparation of Containers and Piping for Welding and Cutting,* American Welding Society Standard AWS F4.1, from Global Engineering Documents (phone: 1-877-413-5184, website: www.global.ihs.com).

*Safe Practices for Welding and Cutting Containers that have Held Combustibles,* American Welding Society Standard AWS A6.0, from Global Engineering Documents (phone: 1-877-413-5184, website: www.global.ihs.com).

*National Electrical Code,* NFPA Standard 70, from National Fire Protection Association, Quincy, MA 02269 (phone: 1-800-344-3555, website: www.nfpa.org and www. sparky.org).

*Safe Handling of Compressed Gases in Cylinders,* CGA Pamphlet P-1, from Compressed Gas Association, 14501 George Carter Way, Suite 103, Chantilly, VA 20151 (phone: 703-788-2700, website:www.cga-net.com).

*Safety in Welding, Cutting, and Allied Processes,* CSA Standard W117.2, from Canadian Standards Association, Standards Sales, 5060 Spectrum Way, Suite 100, Mississauga, Ontario, Canada L4W 5NS (phone: 800-463-6727, website: www.csagroup.org).

*Safe Practice For Occupational And Educational Eye And Face Protection,* ANSI Standard Z87.1, from American National Standards Institute, 25 West 43rd Street, New York, NY 10036 (phone: 212-642-4900, website: www.ansi.org).

*Standard for Fire Prevention During Welding, Cutting, and Other Hot Work,* NFPA Standard 51B, from National Fire Protection Association, Quincy, MA 02269 (phone: 1-800-344-3555, website: www.nfpa.org).

OSHA, Occupational Safety and Health Standards for General Industry, Title 29, Code of Federal Regulations (CFR), Part 1910, Subpart Q, and Part 1926, Subpart J, from U.S. Government Printing Office, Superintendent of Documents, P.O. Box 371954, Pittsburgh, PA 15250-7954 (phone: 1-866-512-1800) (there are 10 OSHA Regional Offices—phone for Region 5, Chicago, is 312-353-2220, website: www.osha.gov).

*Applications Manual for the Revised NIOSH Lifting Equation*, The National Institute for Occupational Safety and Health (NIOSH), 1600 Clifton Rd, Atlanta, GA 30329-4027 (phone: 1-800-232-4636, website: www.cdc.gov/NIOSH).

## 2-6. Informations relatives aux CEM

Le courant électrique qui traverse tout conducteur génère des champs électromagnétiques (CEM) à certains endroits. Le courant issu d'un soudage à l'arc (et de procédés connexes, y compris le soudage par points, le gougeage, le découpage plasma et les opérations de chauffage par induction) crée un champ électromagnétique (CEM) autour du circuit de soudage. Les champs électromagnétiques produits peuvent causer interférence à certains implants médicaux, p. ex. les stimulateurs cardiaques. Des mesures de protection pour les porteurs d'implants médicaux doivent être prises: Limiter par exemple tout accès aux passants ou procéder à une évaluation des risques individuels pour les soudeurs. Tous les soudeurs doivent appliquer les procédures suivantes pour minimiser l'exposition aux CEM provenant du circuit de soudage:

1. Rassembler les câbles en les torsadant ou en les attachant avec du ruban adhésif ou avec une housse.
2. Ne pas se tenir au milieu des câbles de soudage. Disposer les câbles d'un côté et à distance de l'opérateur.
3. Ne pas courber et ne pas entourer les câbles autour de votre corps.
4. Maintenir la tête et le torse aussi loin que possible du matériel du circuit de soudage.
5. Connecter la pince sur la pièce aussi près que possible de la soudure.
6. Ne pas travailler à proximité d'une source de soudage, ni s'asseoir ou se pencher dessus.
7. Ne pas souder tout en portant la source de soudage ou le dévidoir.

**En ce qui concerne les implants médicaux :**

Les porteurs d'implants doivent d'abord consulter leur médecin avant de s'approcher des opérations de soudage à l'arc, de soudage par points, de gougeage, du coupage plasma ou de chauffage par induction. Si le médecin approuve, il est recommandé de suivre les procédures précédentes.

# SECTION 3 – DEFINITIONS

## 3-1. Additional Safety Symbols And Definitions

☞ *Some symbols are found only on CE products.*

| | |
|---|---|
|  | Warning! Watch Out! There are possible hazards as shown by the symbols.<br>Safe1 2012–05 |
|  | Do not discard product (where applicable) with general waste.<br>Reuse or recycle Waste Electrical and Electronic Equipment (WEEE) by disposing at a designated collection facility.<br>Contact your local recycling office or your local distributor for further information.<br>Safe37 2017–04 |
|  | Environmental Protection Use Period (China)<br>Safe123 2016–06 |
| 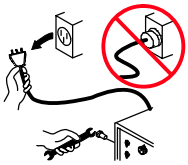 | Disconnect input plug or power before working on machine.<br>Safe5 2017–04 |
| 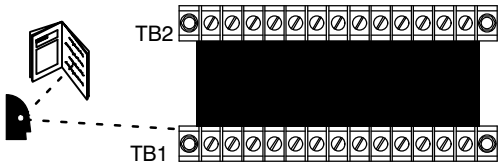  | Read Owner's Manual for terminal strip connection information.<br>Safe116 2014–02 |

## 3-2. Miscellaneous Symbol Definitions

☞ *Some symbols are found only on CE products.*

| | |
|---|---|
| A | Amperage |
| V | Voltage |
| Hz | Hertz |
| | Temperature |
| | Direct Current (DC) |
| | Alternating Current (AC) |
| | Panel/Local |
| | Line Connection |
| 3∿ | Three Phase |
| | Output |
| V | Input |
| I | On |
| O | Off |
| | Submerged Arc Welding (SAW) |
| | Read Operator's Manual |
| | Fuse |
| 1∿ | Single Phase |
| X | Duty Cycle |

| | |
|---|---|
| % | Percent |
| $U_0$ | Rated No–Load Voltage (OCV) |
| $U_1$ | Primary Voltage |
| $U_2$ | Conventional Load Voltage |
| $I_1$ | Primary Current |
| $I_2$ | Rated Welding Current |
| $I_{1max}$ | Rated Maximum Supply Current |
| $I_{1eff}$ | Maximum Effective Supply Current |
| IP | Degree Of Protection |
| | Protective Earth (Ground) |
| | Circuit Breaker Supplementary Protector |
| — | Negative Weld Output Terminal |
| + | Positive Weld Output Terminal |
| | Increase/ Decrease |
| | 3-Phase Power Source With AC/DC Output |
| | Ventilating And Air Circulating Fan |
| | Work Connection |
| | Electrode Connection |

| | |
|---|---|
| | Caution |
| | Frame Or Chassis |
| TE | Terminal Strip |
| | Wire Feed Speed |
| t2 | Postflow Timer |
| t1 | Preflux Timer |
| | Start Time |
| | Start |
| | Stop |
| | Wire Feed Inch Down |
| | Wire Feed Inch Up |
| | Crater Time |
| | Program |
| | Flux |
| | Display Push Button |
| | Lock |
| | Remote |

# SECTION 4 – SPECIFICATIONS

## 4-1. Serial Number And Rating Label Location

### A. Serial Number And Rating Label Location For SubArc Interface Digital, SubArc Motor Control Digital, And SubArc Tractor Interface Digital

The serial number and rating information for the digital controller is located on the right side. Use rating label to determine input power requirements and/or rated output. For future reference, write serial number in space provided on back cover of this manual.

### B. Serial Number And Rating Label Location For SubArc Remote Pendant Digital

The serial number and rating information for the remote pendant is located on the back plate. Use rating label to determine input power requirements. For future reference, write serial number in space provided on back cover of this manual.

### C. Serial Number And Rating Label Location For Wire Drives

The serial number and rating information for this product is located on the motor gear box. Use rating label to determine input power requirements and/or rated output. For future reference, write serial number in space provided on back cover of this manual.

### D. Serial Number And Rating Label Location For Digital Flux Hopper and Manual Flux Hopper

The serial number and rating information for this product is located on the side of the flux hopper. For future reference, write serial number in space provided on back cover of this manual.

## 4-2. Specifications

### A. Specifications For SubArc Interface Digital, Motor Control Digital, Remote Pendant Digital And SubArc Tractor Interface Digital

| Specifications | Description | | | |
|---|---|---|---|---|
| | SubArc Interface Digital | SubArc Motor Control Digital | SubArc Remote Pendant Digital | SubArc Tractor Interface Digital |
| Type Of Power From Power Source | Single-Phase 24 VAC, 25 Amps, 50/60 Hz | Single-Phase 24 VAC, 25 Amps, 50/60 Hz | 42 VDC, 1 Amp | Single-Phase 24 VAC, 25 Amps, 50/60 Hz |
| Overall Dimensions Including Knobs, Receptacles, Etc. | Height: 11.5 in. (292 mm)<br>Width: 12.5 in. (318 mm)<br>Depth: 7.0 in. (178 mm) | Height: 11.5 in. (292 mm)<br>Width: 12.5 in. (318 mm)<br>Depth: 7.0 in. (178 mm) | Height: 3.0 in. (76.2 mm)<br>Width: 10.6 in. (269.2 mm)<br>Depth: 3.3 in. (84 mm) | Height: 11.5 in. (292 mm)<br>Width: 12.5 in. (318 mm)<br>Depth: 7.0 in. (178 mm) |
| Weight | Net: 15.8 lb (7.2 kg) | Net: 12.9 lb (5.8 kg) | Net: 2.7 lb (1.2 kg) | Net: 16.0 lb (7.3 kg) |
| Weld Voltage And Amperage Capacity (AC Or DC) | 0 To 100 Volts<br>0 To 1500 Amperes | 0 To 100 Volts<br>0 To 1500 Amperes | 0 To 100 Volts<br>0 To 1500 Amperes | 0 To 100 Volts<br>0 To 1500 Amperes |
| Wire Feed Speed Range | Dependent On Motor In System | Dependent On Motor In System | Dependent On Motor In System | Dependent On Motor In System |

### B. Specifications For Wire Drives

| Model | Wire Feed Speed Range | Wire Diameter Range | Input Weld Circuit Rating | Rating | Type Of Input Power | Input Power Cord | Weight |
|---|---|---|---|---|---|---|---|
| SubArc Wire Drive 400 Digital Low Voltage | 30 To 400 ipm (0.8 To 10 mpm) | 3/32 To 3/16 in. (2.4 To 4.8 mm) Max Spool Weight: 60lb (27 kg) | 100 Volts 1000 Amperes 100% Duty Cycle | 1/5 HP 85 RPM | 38 VDC | 48 in. (1.22 m) | 27 lb (12 kg) |
| SubArc Wire Drive 780 Digital Low Voltage | 50 To 780 ipm (1.3 To 19.8 mpm) | 1/16 To 1/8 in. (1.6 To 3.2 mm) Max Spool Weight: 60 lb (27 kg) | 100 Volts 1000 Amperes 100% Duty Cycle | 1/4 HP 143 RPM | 38 VDC | 48 in. (1.22 m) | 27 lb (12 kg) |

### C. Specifications For Flux Hoppers

| Model | Used with | Flux Hopper Capacity | Type Of Input Power | Weight |
|---|---|---|---|---|
| SubArc Flux Hopper Digital Low Voltage | Automatic Submerged Arc (SAW) torches with flux control | 25 lb (11.3 kg) | 12 VDC (PWM signal from SubArc Interface) | 11 lb 5kg |
| SubArc Flux Hopper Manual | Automatic Submerged Arc (SAW) torches with flux control | 10 lb (4.5 kg) | N/A | 9 lb 4kg |

## 4-3. Environmental Specifications

### A. IP Rating For All Equipment Covered In This Manual

| IP Rating |
|---|
| IP23<br>This equipment is designed for outdoor use.<br>IP23 2017–02 |

### B. Information On Electromagnetic Compatibility (EMC) For SubArc Interface Digital, SubArc Motor Control Digital, SubArc Remote Pendant Digital, SubArc Tractor Interface Digital, SubArc Digital Flux Hopper, And SubArc Wire Drives Covered In This Manual

**This Class A equipment is not intended for use in residential locations where the electrical power is provided by the public low–voltage supply system. There can be potential difficulties in ensuring electromagnetic compatibility in those locations, due to conducted as well as radiated disturbances.**

ce-emc 3 2014-07

### C. Temperature Specifications

| Operating Temperature Range | Storage/Transportation Temperature Range |
|---|---|
| 14 to 104 °F (–10 to 40°C)<br>Temp1_016-08 | –4 to 131 °F (–20 to 55°C)<br>Temp1_016-08 |

# Notes

## D. China EEP Hazardous Substance Information

| 中国电器电子产品中有害物质的名称及含量<br>China EEP Hazardous Substance Information | | | | | | |
|---|---|---|---|---|---|---|
| 部件名称<br>Component Name<br>(如果适用)<br>(if applicable) | 有害物质<br>Hazardous Substance | | | | | |
| | 铅<br>Pb | 汞<br>Hg | 镉<br>Cd | 六价铬<br>Cr6 | 多溴联苯<br>PBB | 多溴二苯醚<br>PBDE |
| 黄铜和铜部件<br>Brass and Copper Parts | X | O | O | O | O | O |
| 耦合装置<br>Coupling Devices | X | O | O | O | O | O |
| 开关装置<br>Switching Devices | O | O | X | O | O | O |
| 线缆和线缆配件<br>Cable and Cable Accessories | X | O | O | O | O | O |
| 电池<br>Batteries | X | O | O | O | O | O |
| 本表格依据中国SJ/T 11364的规定编制.<br>This table is prepared in accordance with China SJ/T 11364. | | | | | | |
| O:<br>表示该有害物质在该部件所有均质材料中的含量均在中国GB/T26572规定的限量要求以下.<br>Indicates that the concentration of the Hazardous Substance in all homogeneous materials of the part is below the relevant threshold of China GB/T 26572. | | | | | | |
| X:<br>表示该有害物质至少在该部件的某一均质材料中的含量超出中国GB/T26572规定的限量要求.<br>Indicates that the concentration of the Hazardous Substance in at least one homogeneous material of the part is above the relevant threshold of China GB/T 26572. | | | | | | |
| 电器电子产品的环保使用期限依据中国SJ/Z11388的规定确定.<br>The EFUP value of this EEP is defined in accordance with China SJ/Z 11388. EEP_2016-06 | | | | | | 25 |

## 4-4. SubArc System Compatibility

The following power source and accessory models are compatible. The interface will automatically detect the power source and wire drive type connected.

☞ *Only like power source models can be connected with parallel or tandem cables.*

**Power Sources:**

907620 - SubArc AC/DC 1000Digital

907621 - SubArc AC/DC 1250Digital

907622 - SubArc DC 650Digital

907923 - SubArc DC 800Digital

907624 - SubArc DC 1000Digital

907625 - SubArc DC 1250Digital

**Interfaces:**

300936 – SubArc Interface Digital

300937 – SubArc Interface Analog

301423 – SubArc Tractor Interface Digital

301424 – SubArc Remote Pendant Digital

301425 – SubArc Motor Control Digital

**Wire Drives:**

300938 – SubArc Wire Drive 400 Digital Low Voltage

300938001 – SubArc Wire Drive 400 Digital Low Voltage For Tractors

300939 – SubArc Strip Drive 100 Digital Low Voltage

300940 – SubArc Strip Drive 100 Digital Low Voltage w/Mounting Bracket

300941 – SubArc Wire Drive 780 Digital Low Voltage

**Flux Hoppers:**

300942 – SubArc Flux Hopper Digital Low Voltage

301445 – SubArc Manual Flux Hopper

# SECTION 5 – INSTALLATION

## 5-1. Dimensions And Mounting Hole Layouts

### A. SubArc Interface Digital Dimensions And Mounting Hole Layout

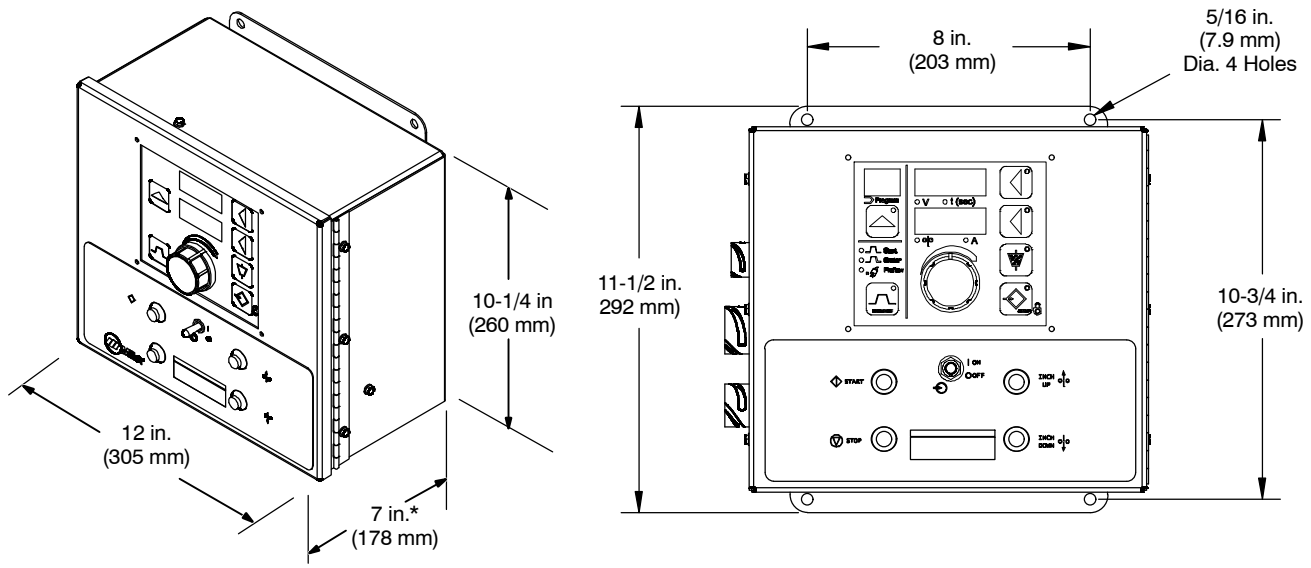


*** Includes front panel knobs/switches**

265694-A / 266208-A

### B. SubArc Tractor Interface Digital Dimensions And Mounting Hole Layout

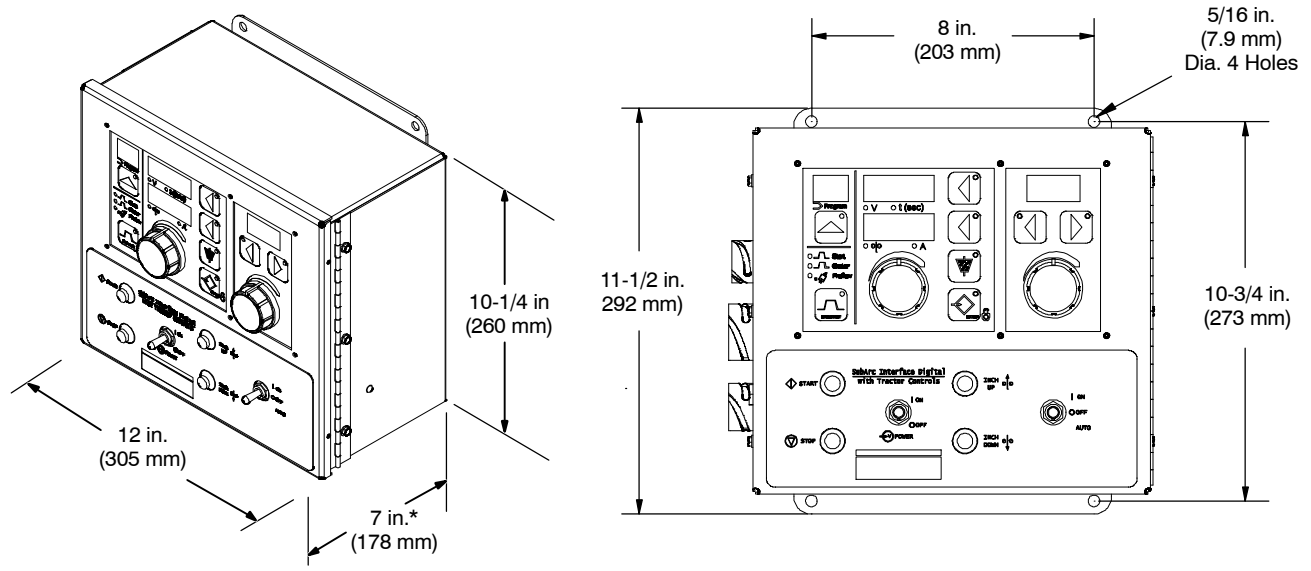


*** Includes front panel knobs/switches**

279099-A

## C. SubArc Motor Control Digital Dimensions And Mounting Hole Layout

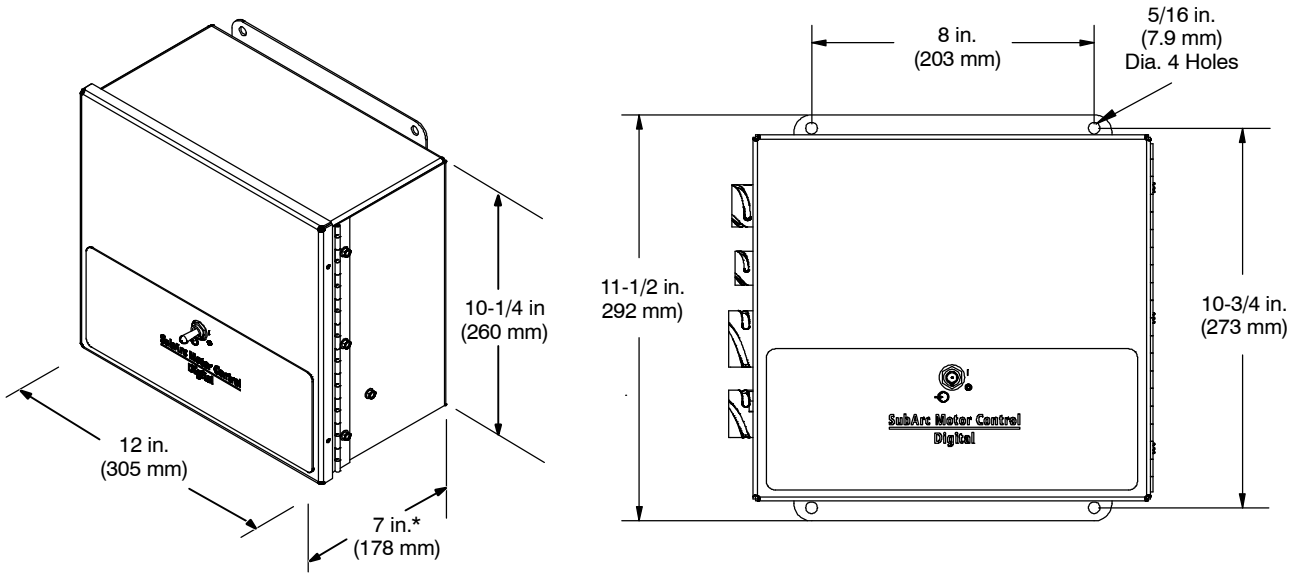


*** Includes front panel knobs/switches**

277879-A

## D. SubArc Remote Pendant Digital Dimensions And Mounting Hole Layout

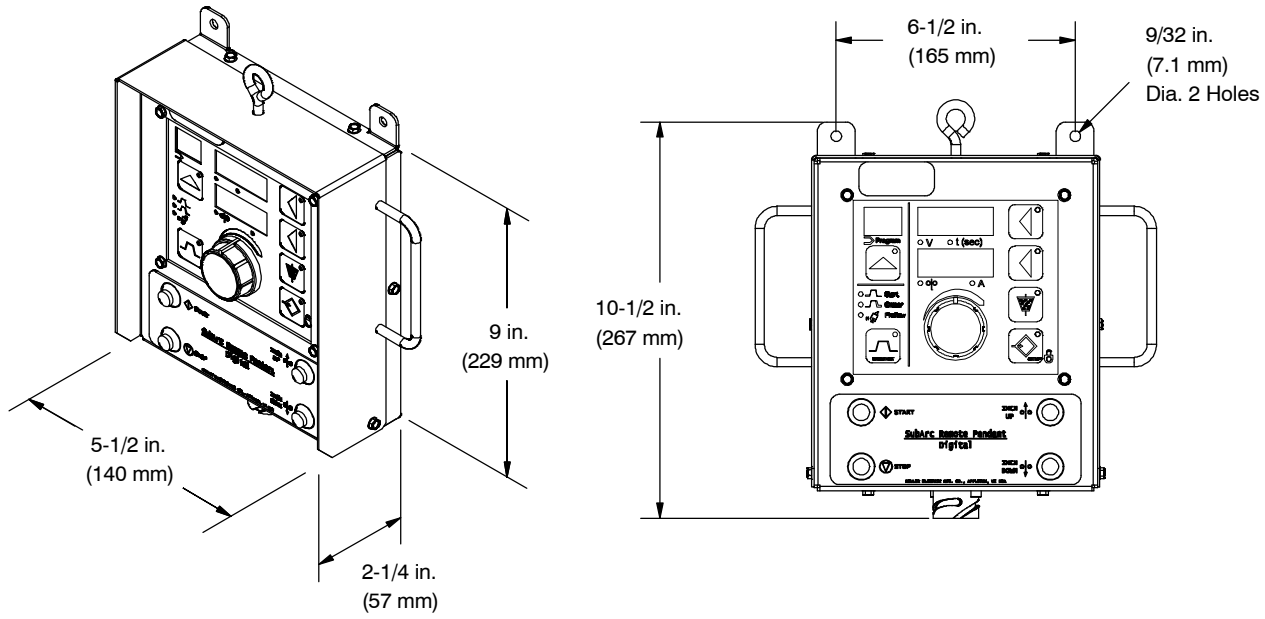


277880-A

## E. SubArc Digital Flux Hopper Dimensions

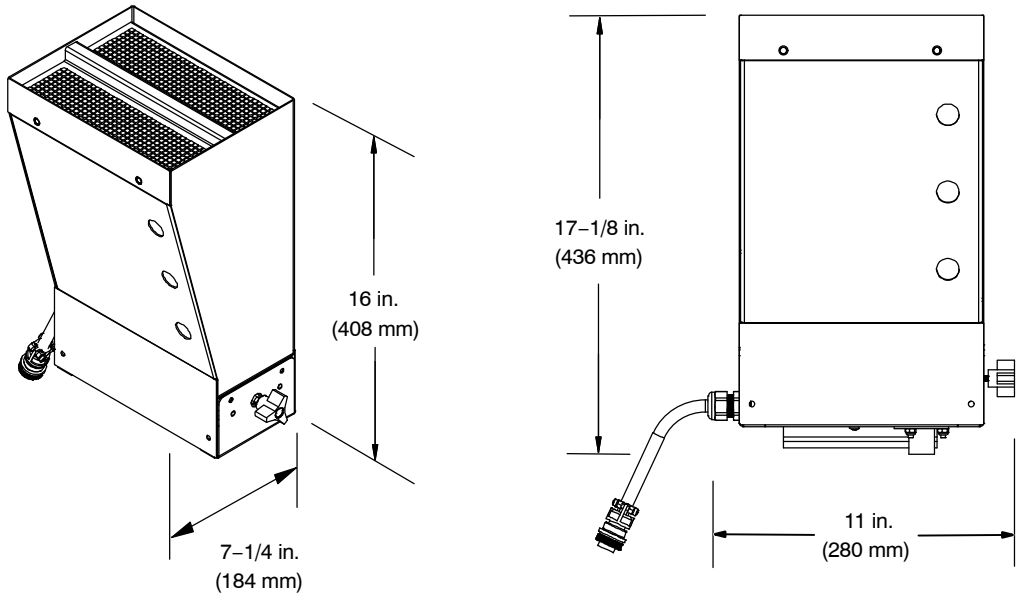


Ref. 267344-B

## F. SubArc Manual Flux Hopper Dimensions

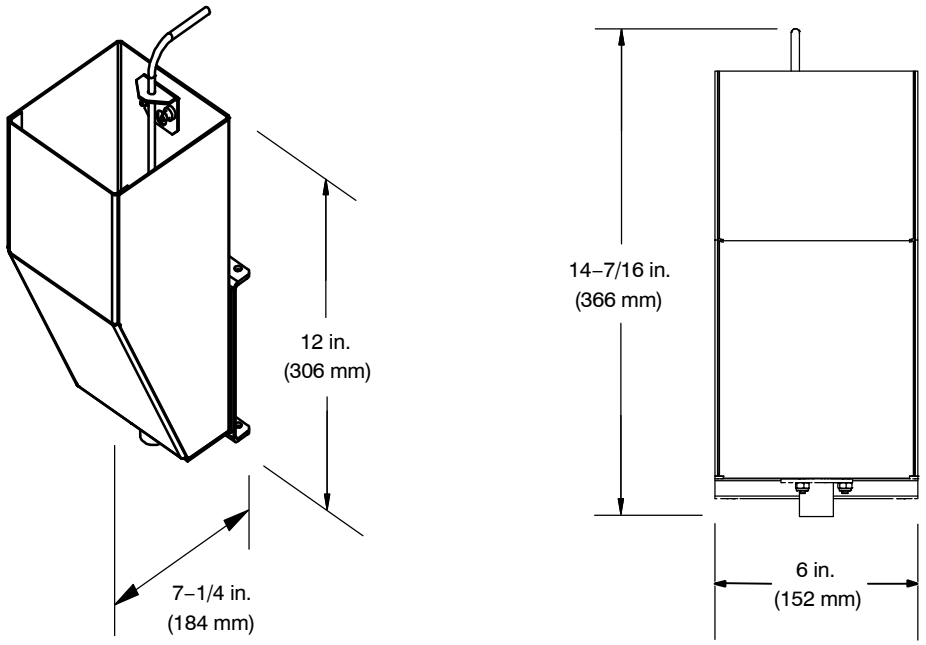


279011-A

## G. Wire Drives Dimensions And Mounting Hole Layout

| | Inches | Millimeters |
|---|---|---|
| A | 8-5/8 | 219 |
| B | 12-5/8 | 321 |
| C | 12-3/4 | 324 |

| | Inches | Millimeters |
|---|---|---|
| A | 2–1/2 | 64 |
| B | 3/8–16 Tapped 4 Holes | |

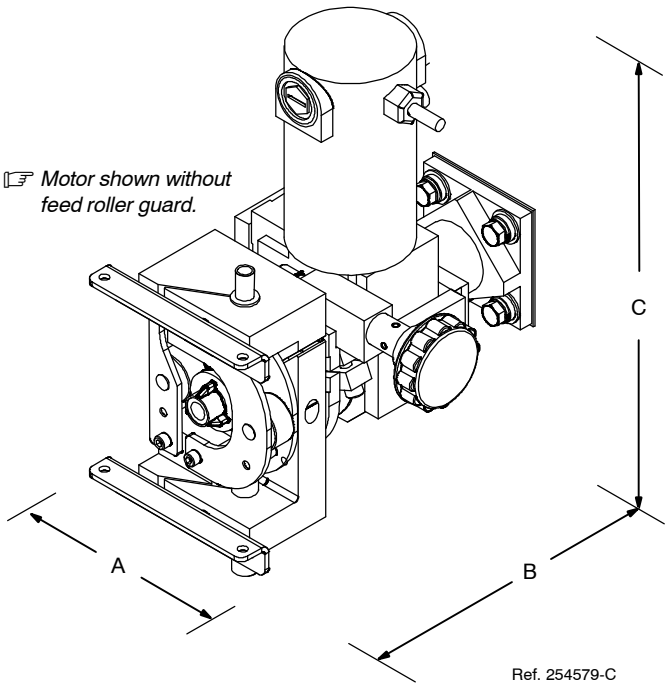


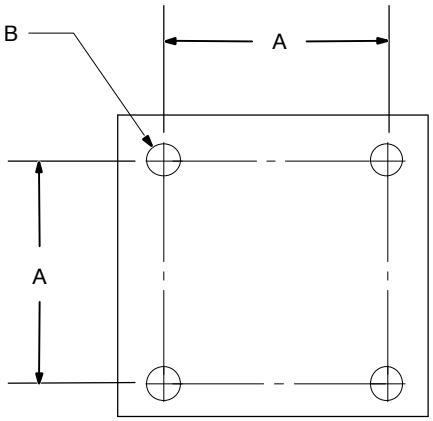


# Notes

# SECTION 6 – SYSTEM CONNECTIONS

## 6-1. Left Side Panel Connections For SubArc Interface Digital, Motor Control Digital And Tractor Interface Digital

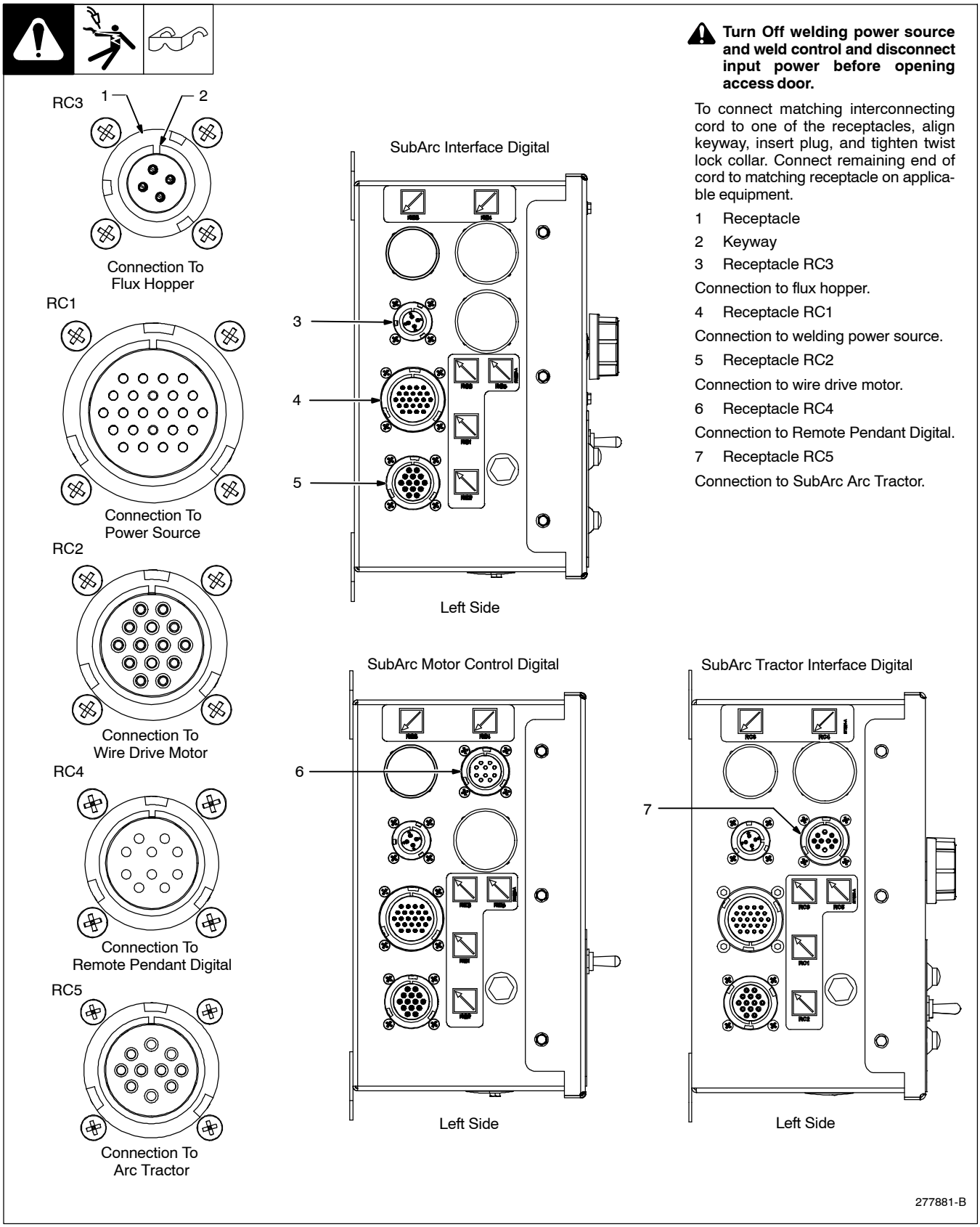


**Turn Off welding power source and weld control and disconnect input power before opening access door.**

To connect matching interconnecting cord to one of the receptacles, align keyway, insert plug, and tighten twist lock collar. Connect remaining end of cord to matching receptacle on applicable equipment.

1 Receptacle

2 Keyway

3 Receptacle RC3

Connection to flux hopper.

4 Receptacle RC1

Connection to welding power source.

5 Receptacle RC2

Connection to wire drive motor.

6 Receptacle RC4

Connection to Remote Pendant Digital.

7 Receptacle RC5

Connection to SubArc Arc Tractor.

## 6-2. Bottom Panel Connections For SubArc Remote Pendant Digital

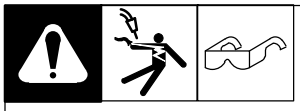

**Turn Off welding power source before making connections.**

To match interconnecting cord to one of the receptacles, align keyway, insert plug, and tighten twist lock collar. Connect remaining end of cord to matching receptacle on SubArc Motor Control Digital.

1 Receptacle RC4

To Motor Control Digital

2 Keyway

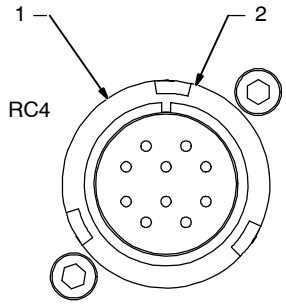


Connection To
Motor Control Digital

SubArc Remote Pendant Digital

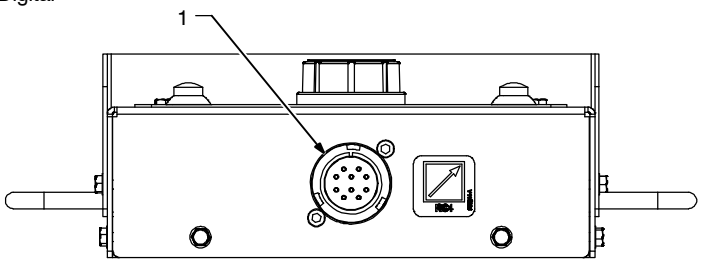


Bottom View

277882-A

## 6-3. Remote Receptacle RC2 Information For SubArc Interface Digital, Motor Control Digital And Tractor Interface Digital

| | Circuit | Contact Information |
|---|---|---|
| Wire feed Drive Motor Hookups | J | Positive (+) motor armature (38 VDC motor). |
| | A | Negative (–) motor armature (38 VDC motor). |
| | H | Motor identification (resistor across H and B). |
| | C | Shield drain leads. |
| | I | Encoder VCC (+5 VDC). |
| | K | Encoder channel A. |
| | B | Encoder common and motor identification (resistor across H and B). |
| | E | Reserved for negative volt sense. |
| | F | Positive volt sense. |

## 6-4. Remote Receptacle RC1 Information For SubArc Interface Digital, Motor Control Digital And Tractor Interface Digital

| Function | Circuit | Contact Information |
|---|---|---|
| Electrical Input Power | A, B | 24 VAC. Protected by circuit breaker CB2. |
| | C, D | 24 VAC neutral. |
| Accessory Serial Communication | J | +Accessory RS–485 communication. |
| | V | –Accessory RS–485 communication. |
| | Q | Accessory serial communication common. |
| Shield | H | Contact J/V shield drain lead. |
| Volt Sense | W | + Volt sense. |
| | X | Reserved for – volt sense. |

## 6-5. Remote Receptacle RC3 Information For SubArc Interface Digital, Motor Control Digital And Tractor Interface Digital

| | Circuit | Contact Information |
|---|---|---|
| Flux Hopper Hookups | A | 12 VDC average PWM drive for flux hopper. |
| | B | Not used. |
| | C | Circuit common for flux hopper. |
| | D | Not used. |

## 6-6. Remote Receptacle RC4 Information For SubArc Remote Pendant Digital And Motor Control Digital

| Function | Circuit | Contact Information |
|---|---|---|
| Electrical Input Power | B | 42 VDC common. |
| | D | 42 VDC. |
| Accessory Serial Communication | I | +Accessory RS-485 communication. |
| | G | –Accessory RS-485 communication. |
| | H | Chassis. |
| Push Buttons | A | Jog up. |
| | C | Start. |
| | E | Stop. |
| | F | COM EXT. |
| | J | Jog down. |

## 6-7. Remote Receptacle RC5 Information For SubArc Tractor Interface Digital

| Function | Circuit | Contact Information |
|---|---|---|
| Motor | A | Motor armature phase A. |
| | B | Motor armature phase B. |
| | D | Motor shield. |
| Motor ID | E | Common. |
| | F | Motor identification (resistor across F and E). |
| Motor Encoder | G | Encoder VCC (+5VDC). |
| | J | Encoder channel A. |
| | K | Common. |

## 6-8. Terminal Block TB1 And TB2 Connections For SubArc Interface Digital And Motor Control Digital

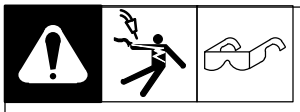

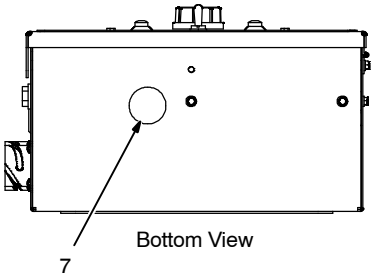


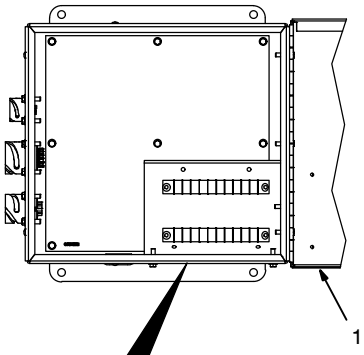


**Turn Off welding power source and weld control and disconnect input power before opening access door.**

1 Access Door

Remove securing screws and open access door.

2 Terminal Block TB2

3 Terminal Block TB1

4 Securing Screw - Terminal Block

5 Stripped Lead

6 Typical Lead Being Connected To Terminal Block

7 Access Hole - Used For Connections To Terminal Blocks, Flux Valve, etc.

☞ *Install strain relief (customer supplied) in access hole.*

Strip 1/4 in (6 mm) insulation off end of lead, insert end into proper location on TB1 and TB2. Tighten applicable securing screw.

Close and secure access door.

Tools Needed:

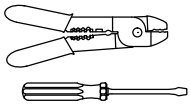

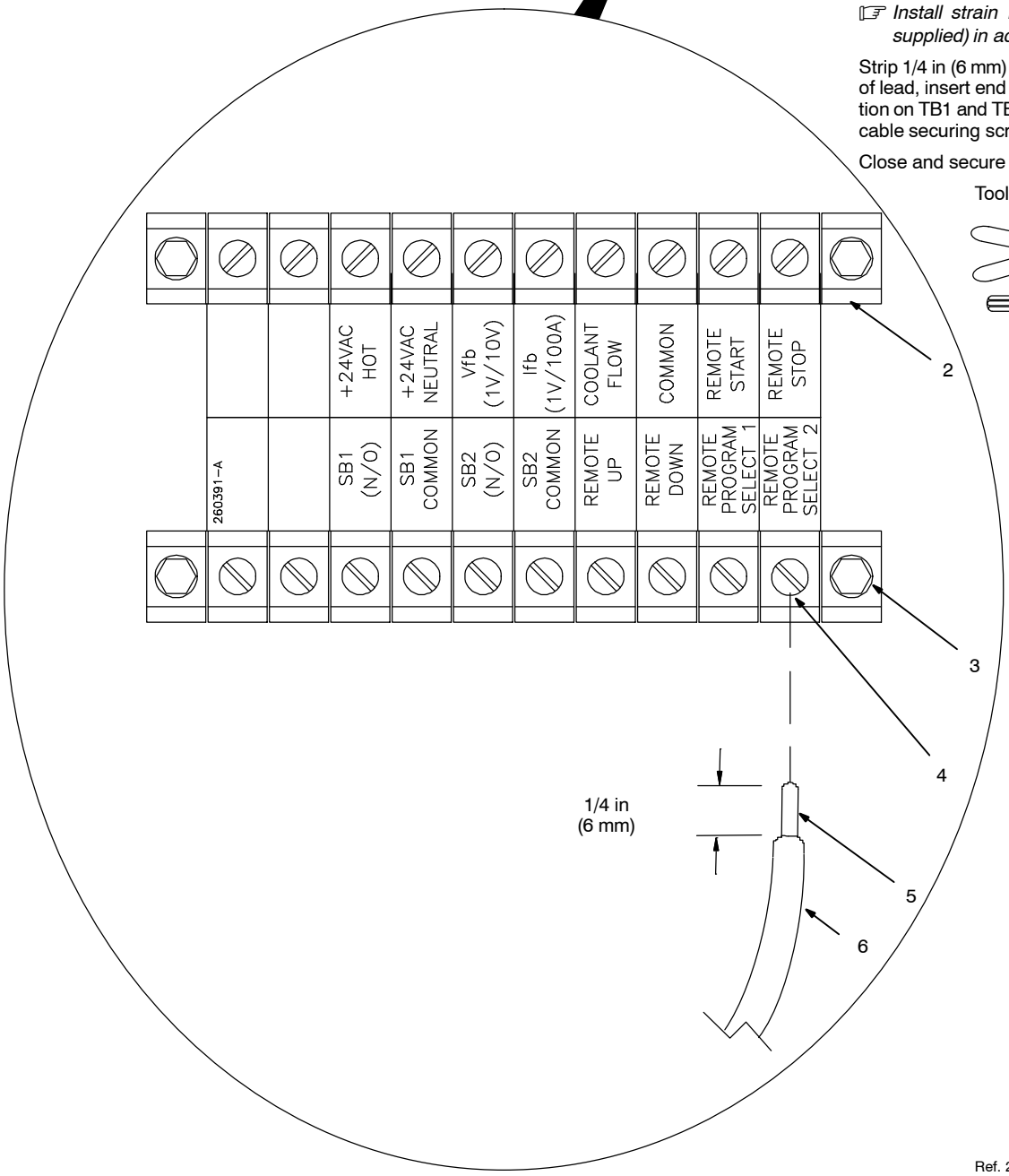


Ref. 265695-A / 267618-A

## 6-9. Terminal Block TB1 Connection Information For SubArc Interface Digital And Motor Control Digital

| Terminal | Function Information |
|---|---|
| Blank | Not used. |
| Blank | Not used. |
| SB1 | Normally open set of contacts* that defaults close when power source contactor energizes after the start button is pressed and preflux has timed out. On digital models, this condition is programmable via auxiliary menus (see Section 7-6). |
| SB1 Common | Common used with Relay 1. |
| SB2 | Normally open set of contacts* that close when an arc is established. These contacts are used when you want the side beam to start moving once an arc has been established. Contacts open again when the stop button is pressed. On digital models, this condition is programmable via auxiliary menus (see Section 7-6). |
| SB2 Common | Common used with Relay 2. |
| Remote UP | When connected to Common (on TB2), jogs wire up. |
| Remote Down | When connected to Common (on TB2), jogs wire down. |
| Remote Program Select 1 | See Section 7-8. |
| Remote Program Select 2 | See Section 7-8. |
| *All contacts are rated 10 amperes, 125 volts AC. | |

## 6-10. Terminal Block TB2 Connection Information For SubArc Interface Digital And Motor Control Digital

| Terminals | Function Information |
|---|---|
| Blank | Not used. |
| Blank | Not used. |
| +24 volts Hot | 24 VAC power supply. |
| 24 volts AC Neutral | |
| VFB | Voltage feedback 1V/10V (Scaled feedback accuracy within ±5% of output. Feedback is for reference only.) |
| IFB | Current feedback 1A/100A (Scaled feedback accuracy within ±5% of output. Feedback is for reference only.) |
| Coolant Flow* | Connect to coolant flow sensor. Coolant flow is detected when this pin is tied to Common. |
| Common | External common. |
| Remote Start | Starts the weld cycle when connected to Common |
| Remote Stop | Stops the weld cycle when connected to Common. |
| *The Coolant Flow Sensor feature is only active when a Strip Drive 100 is connected to the interface. | |

## 6-11. Installing Wire Guide And Drive Roll

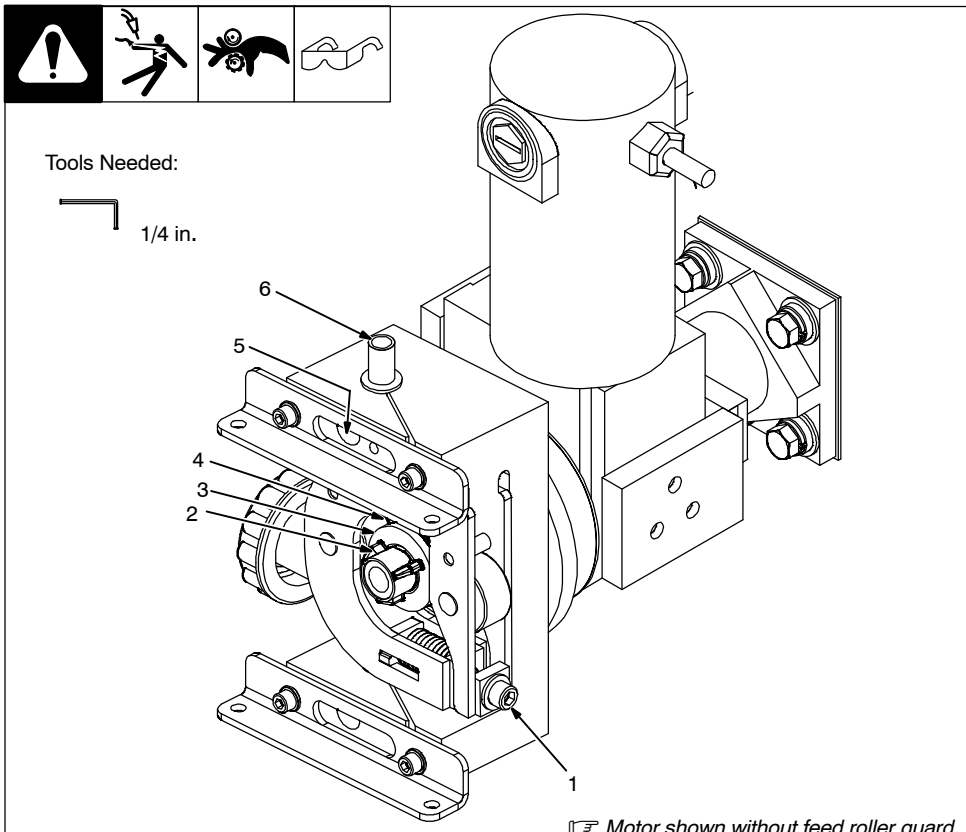


☞ *When changing wire size or type, check drive roll size.*

1 Wire pressure adjustment screw

Loosen screw to decrease tension on spring.

2 Drive Roll Nut

3 Drive Roll (Not Supplied)

Remove drive roll.

4 Drive Roll Carrier

Turn nut one click to line up lobes with lobes on drive roll carrier.

5 Wire Guide Securing Screw (Hidden)

Loosen wire guide screw.

6 Inlet Wire Guide (Supplied With Wire Straightener Kit)

Remove inlet wire guide.

Install drive rolls, and turn drive roll nut one click.

☞ *Motor shown without feed roller guard.*

254579-C

## 6-12. SubArc Interface Digital Plug Connections

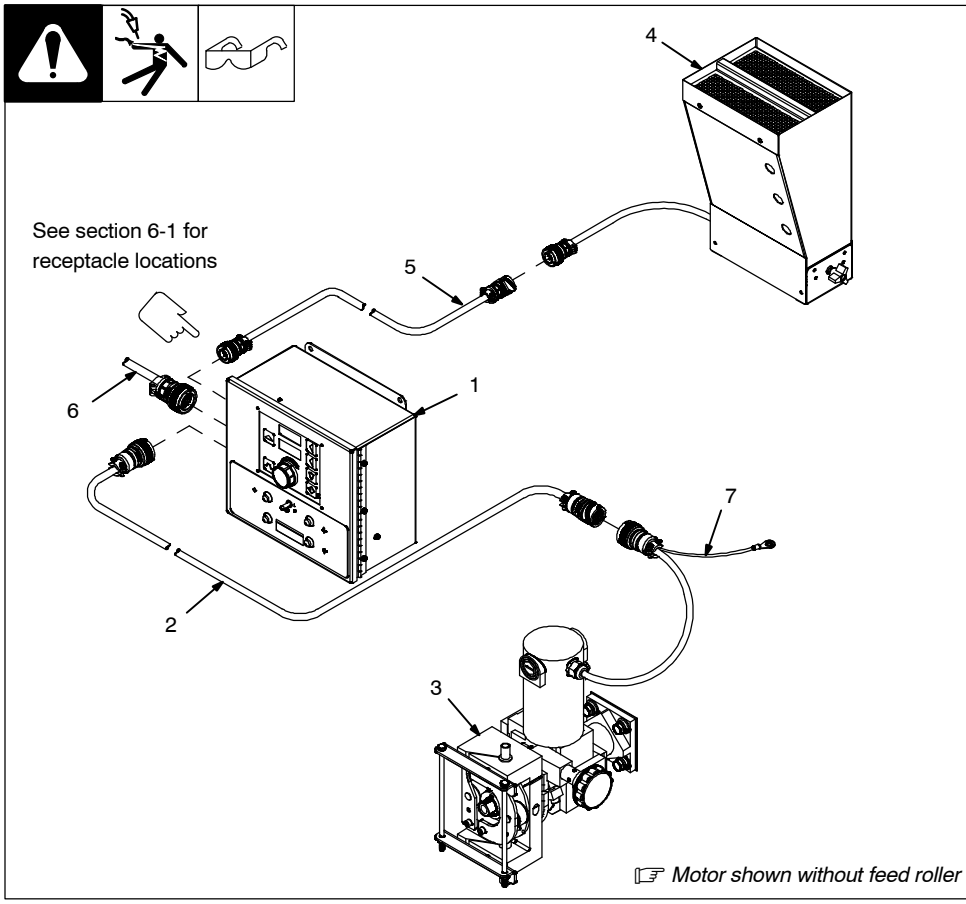


1 SubArc Interface

2 Motor Extension Cable Part No. 254232 XXX

XXX refers to the cable length in feet (e.g. 010 suffix is a 10 ft extension cable).

3 Wire Drive Assembly

4 Flux Hopper

5 Flux Hopper Extension Cable Part No. 260623 XXX

XXX refers to the cable length in feet (e.g. 010 suffix is a 10 ft extension cable).

6 Power Source Control Cable Part No. 260622 XXX

XXX refers to the cable length in feet (e.g. 030 suffix is a 30 ft control cable).

7 Positive Volt Sense Lead

Connect positive volts sense leads to torch.

☞ *Motor shown without feed roller guard.*

Ref. 254593-C / Ref. 267344-B

## 6-13. SubArc Tractor Interface Digital Plug Connections

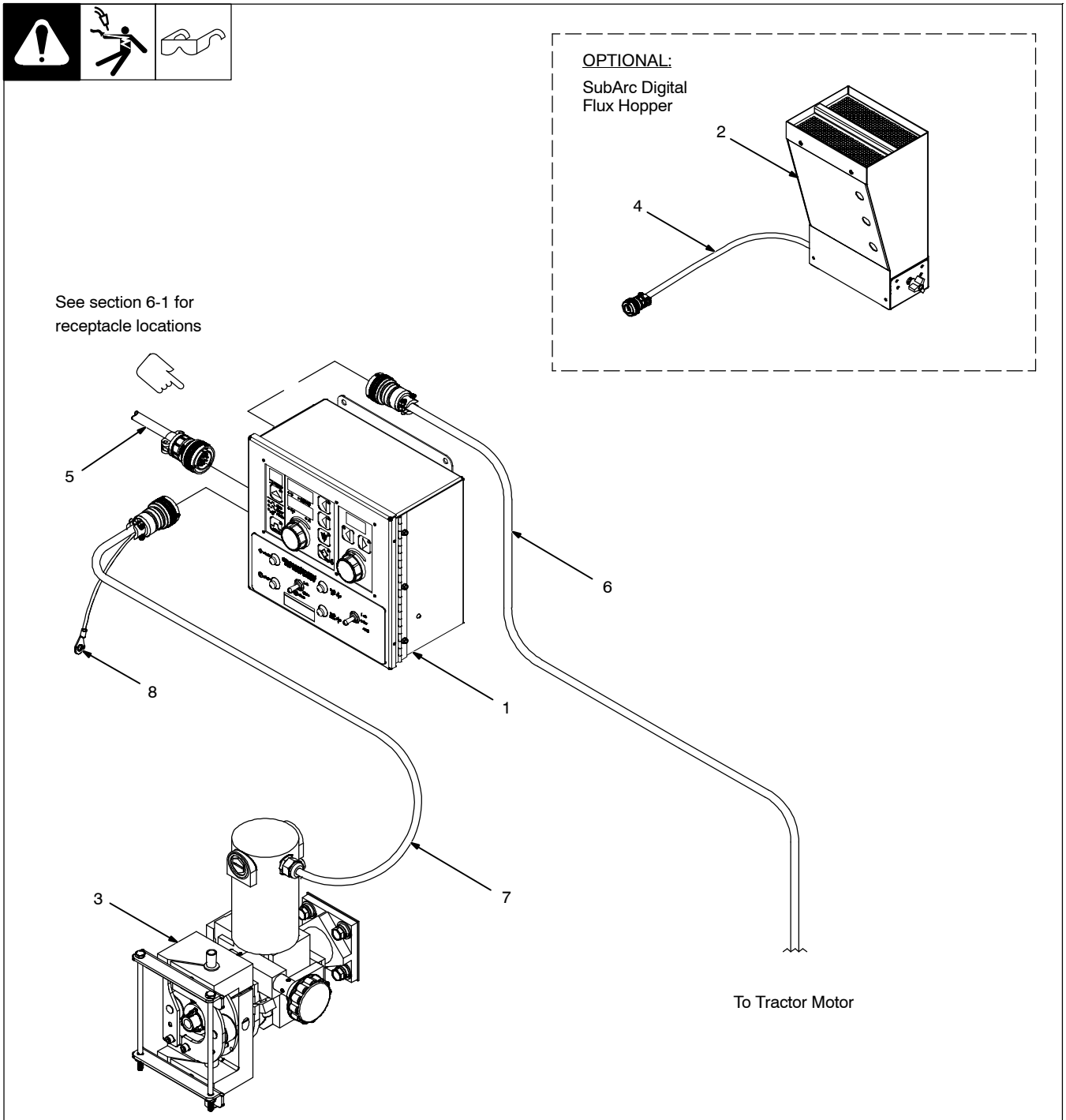


1 SubArc Tractor Interface Digital
2 Digital Flux Hopper (Optional)
3 Wire Drive Assembly
4 Flux Hopper Control Cable
5 Power Source Control Cable - Part No. 260622XXX

☞ *The XXX part no. suffix refers to cable length in feet (e.g. 020 is a 20 ft. Cable).*

6 Tractor Control Cable
7 Motor Control Cable
8 Positive Volt Sense Lead

Connect positive volt sense lead to torch.

279012-A / Ref. 267344-B

## 6-14. SubArc Motor Control Digital And Remote Pendant Digital Plug Connections

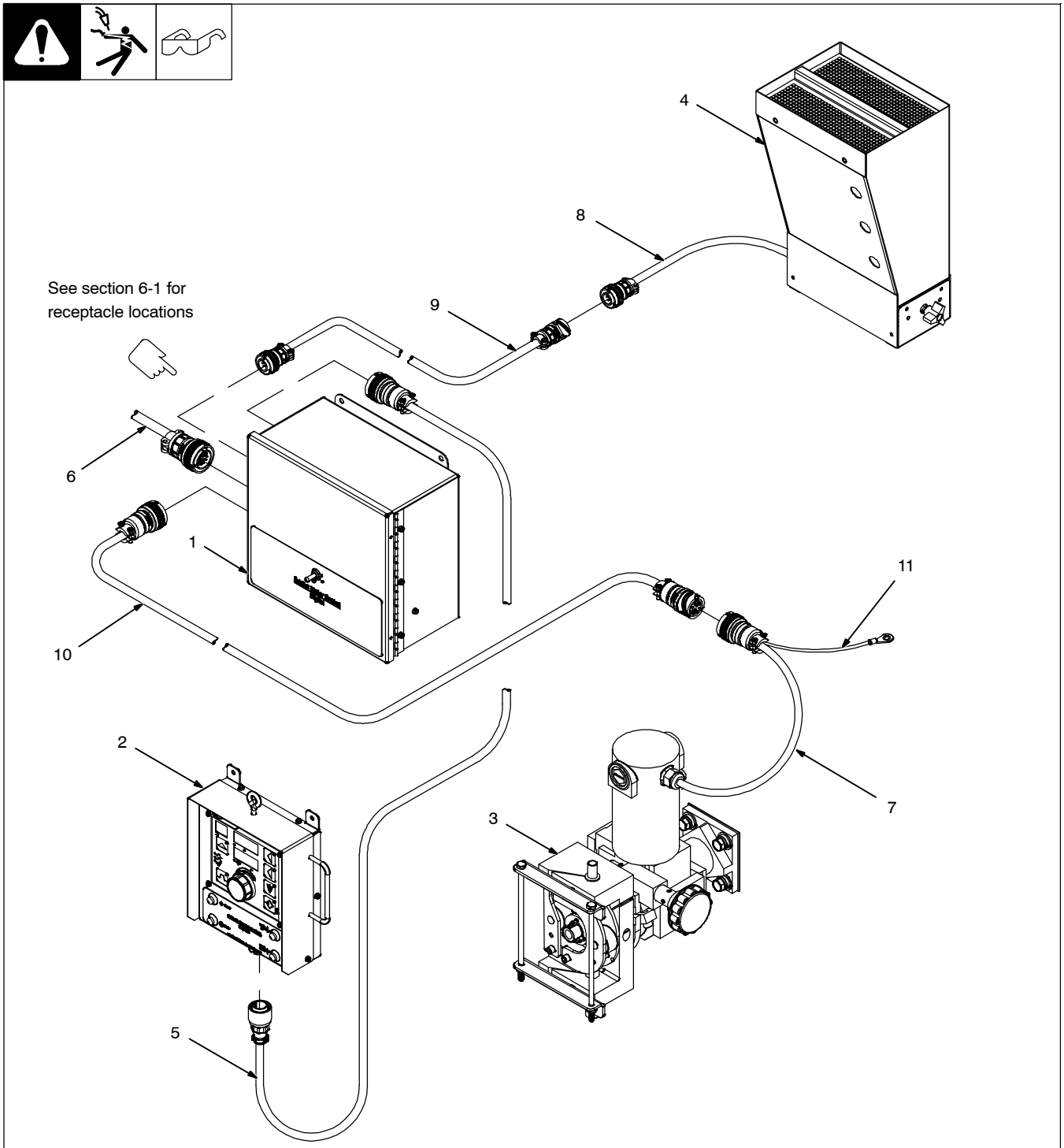


1 SubArc Motor Control Digital
2 SubArc Remote Pendant Digital
3 Wire Drive Assembly
4 Flux Hopper

☞ *The XXX part no. suffix refers to cable length in feet (e.g. 020 is a 20 ft. Cable).*

5 Remote Pendant Control Cable - Part No. 263368XXX (Continuum Control Cable)
6 Power Source Control Cable - Part No. 260622XXX
7 Motor Control Cable
8 Flux Hopper Control Cable
9 Flux Hopper Extension Cable - Part No. 262623XXX
10 Motor Extension Cable - Part No. 254232XXX
11 Positive Volt Sense Lead

Connect positive volt sense lead to torch.

278023-B

## 6-15. Threading And Feeding Welding Wire

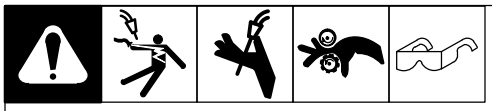

Tools Needed:

1/4 in.

Set power switches on the power source and interface to On. Output control switch on the power source is disabled when connected to a system interface.

☞ *Hold wire tightly to keep it from unraveling.*

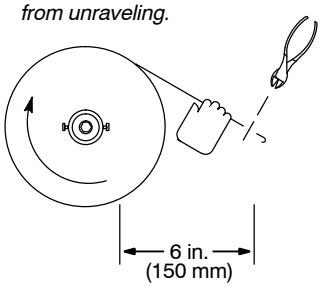


Pull and hold wire; cut off end.

**WIRE ADVANCE**

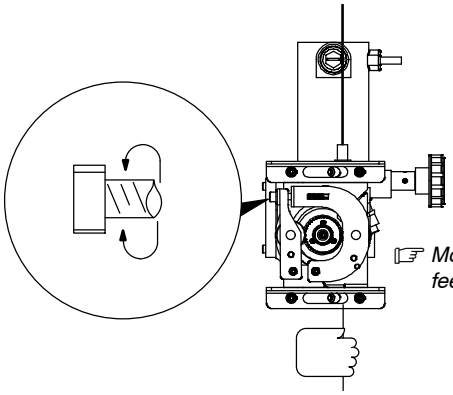

☞ *Motor shown without feed roller guard.*

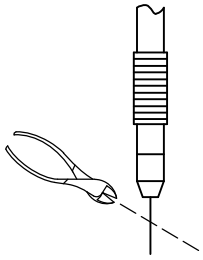

Cut off wire at a diagonal.

Push wire thru guide up to drive rolls; continue to hold welding wire. Press Wire Advance push button until drive rolls grab wire. Adjust tension until wire does not slip. Indicator is for reference only.

Ref. 153072 / Ref. 156798 / Ref. 265710-B

## 6-16. Changing Wire Drive Assembly Configuration

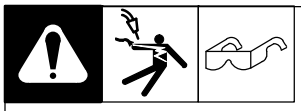

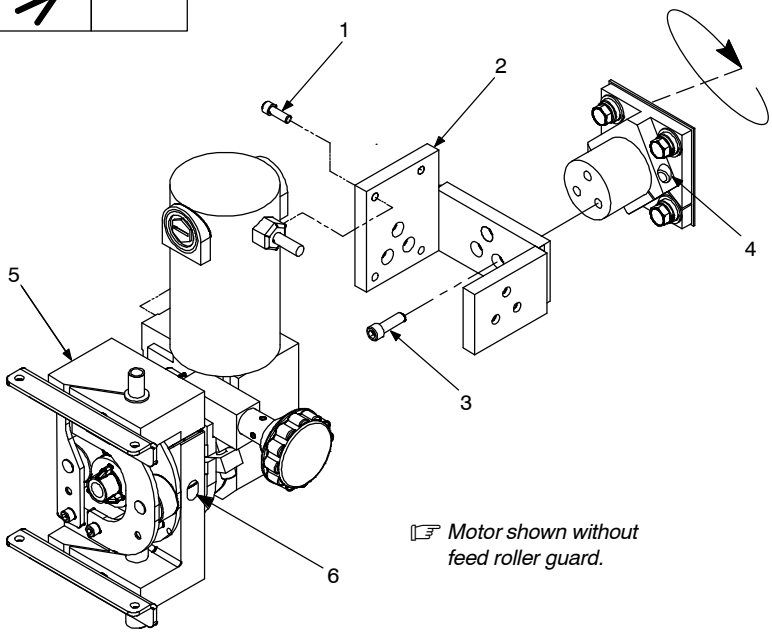


☞ *Motor shown without feed roller guard.*

**Do not pinch drive motor cord when rotating assembly.**

1 Motor Mounting Screws

2 Motor Mounting Bracket

3 Motor Mounting Bracket Screws

To change the feed head position, remove motor mounting screws and remove motor from bracket. Remove bracket mounting screws and rotate bracket to desired position. Tighten screws to secure bracket. Secure motor back into bracket with the screws removed earlier.

4 Mounting Bracket Screw

Loosen mounting bracket screw to rotate the assembly around the mounting bracket.

5 Feed Plate

6 Feed Plate Screw

Loosen feed plate screw to rotate feed plate around motor shaft.

☞ *Re-tighten hardware when the assembly is in the desired position.*

Tools Needed:

3/16, 1/4 in.

254695-C

## 6-17. Manually Changing Feed Plate Angle On Wire Drive

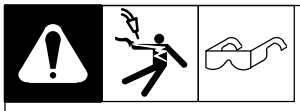

1 Adjusting Knob

Turn adjusting knob to change torch angle.

2 Hub Clamp Screw

Tighten screw.

3 Feed Plate Screw

Loosen screw.

☞ *The feed plate maximum tilt angle is about 15 degrees from center in both directions.*

Tools Needed:

1/4 in.

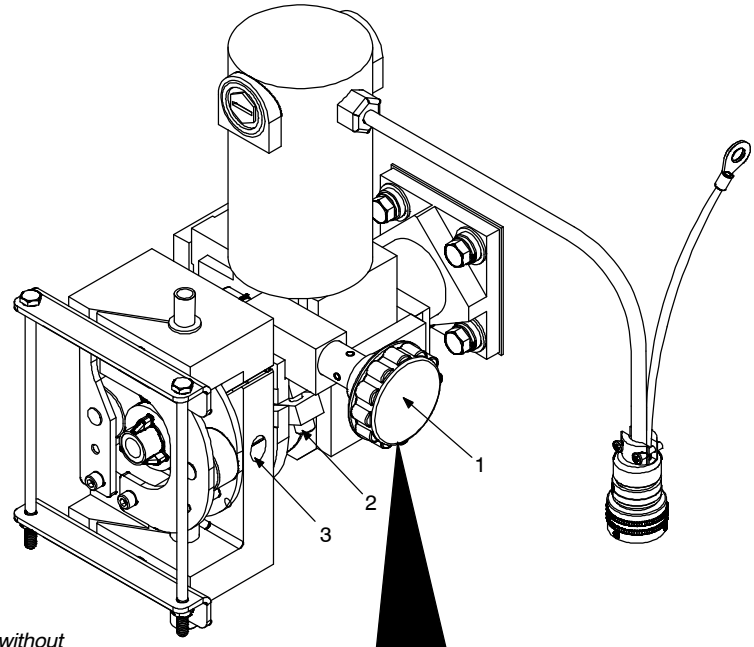


☞ *Motor shown without feed roller guard.*

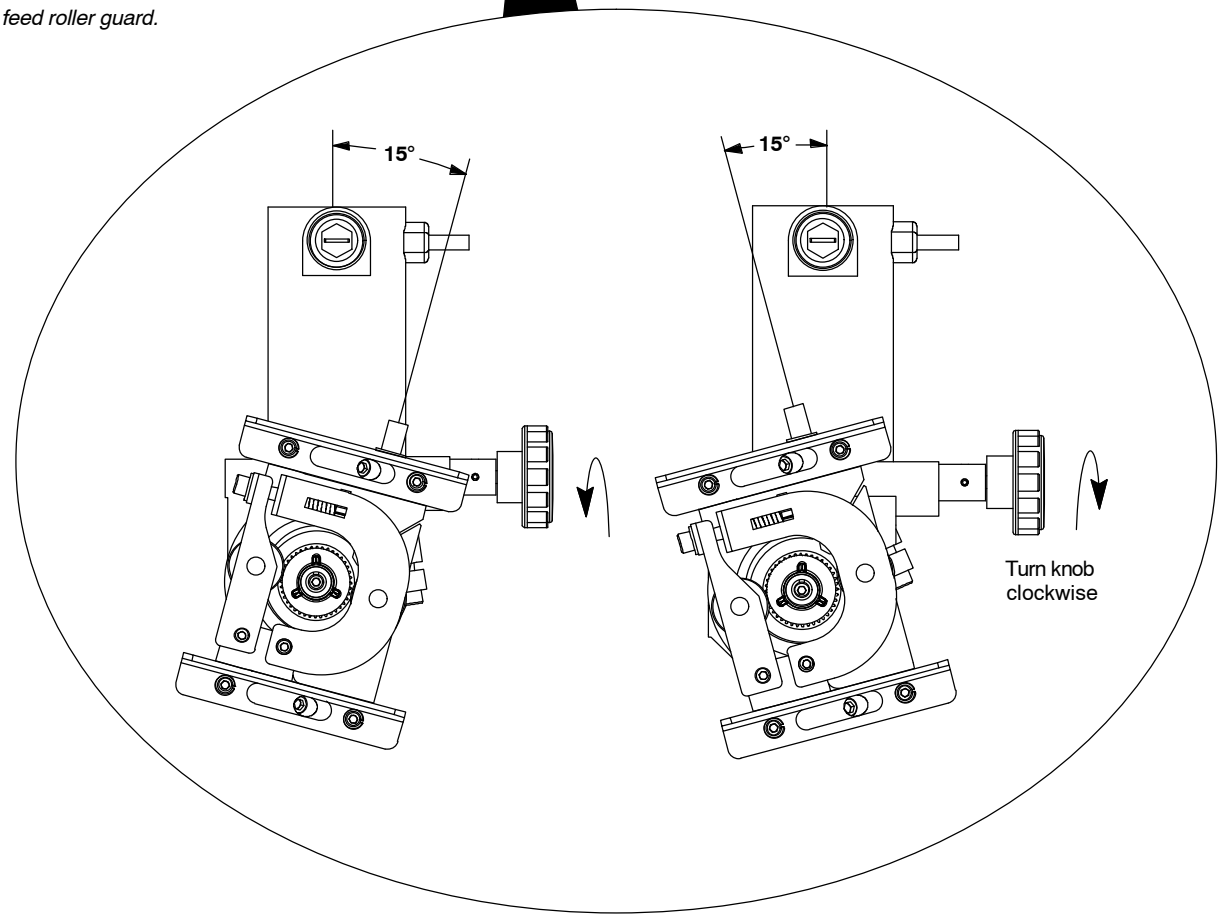


254575-C

## 6-18. Connecting Electrode Volt Sense Lead To A Torch For DCEP OR AC Operation

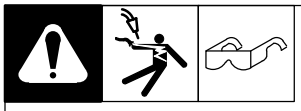

1 Electrode Weld Cable
2 Torch
3 Wire Drive
4 Motor Control Cable
5 Electrode Volt Sense Lead
6 Torch Connection Tab

Connect the electrode volt sense lead from the motor control cable and the electrode weld cable to the torch connection tab.

☞ *Do not use the electrode volt sense lead (item 5) when setting up to operate in DCEN on a DC power source. See the DC power source Owner's Manual for correct DCEN set-up.*

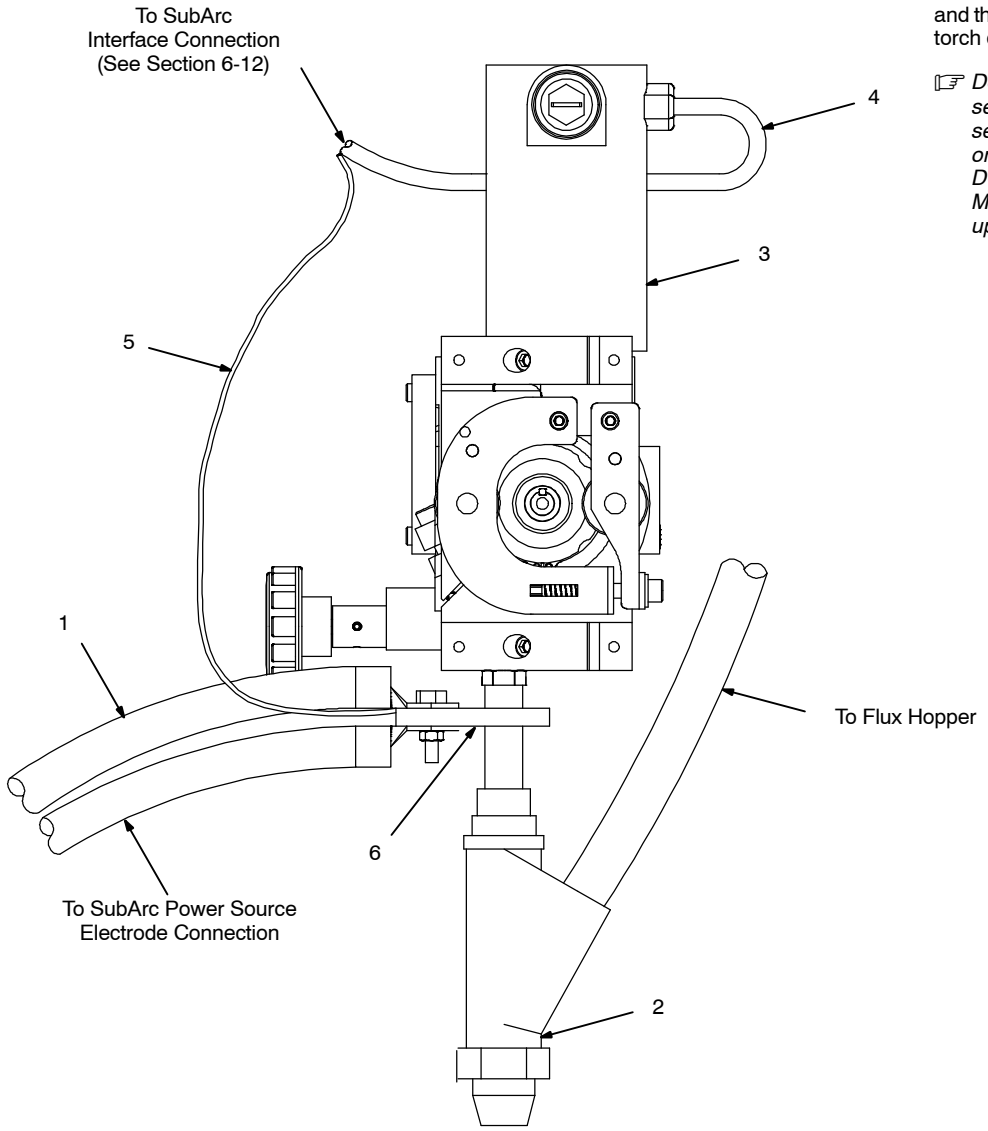


Tools Needed:

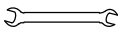

3/4 in.

266136-B

## 6-19. Location Of Torch For Tandem Arc Applications

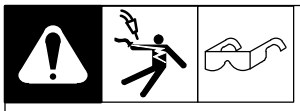

☞ *Follow instructions below to change torch to right-of-center or left-of-center.*

**Assembly As Shipped**
(With torch right of center)

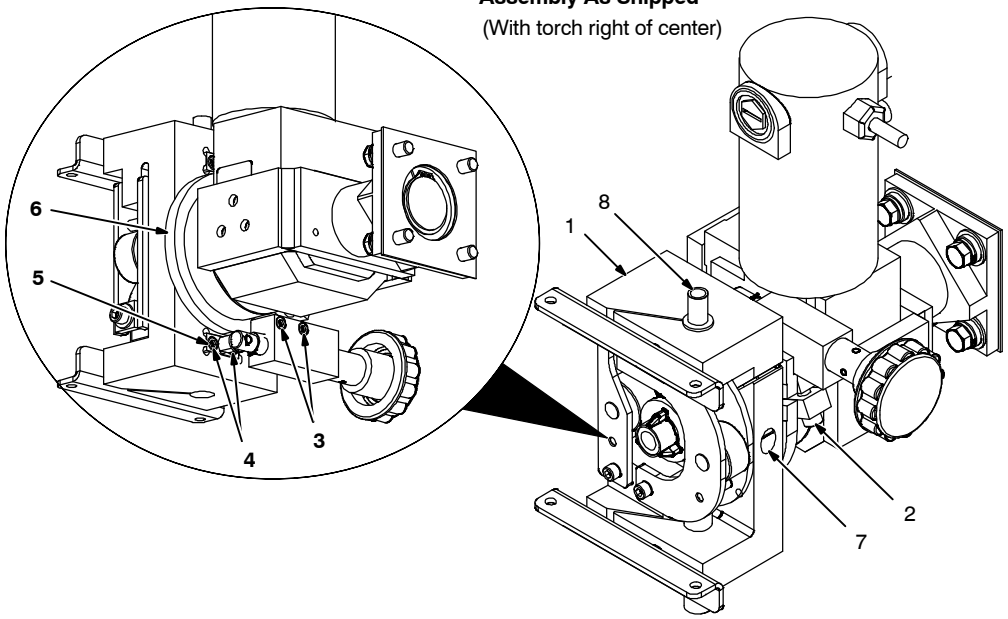


Tools Needed:

3/16, 1/4 in.

**Torch Left Of Center**
(With tilt angle adjusting knob on left side)

**Torch Right Of Center**
(With tilt angle adjusting knob on right side)

☞ *Motor shown without feed roller guard.*

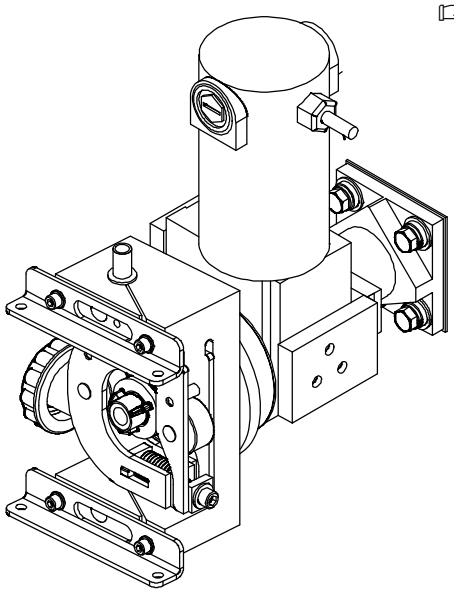

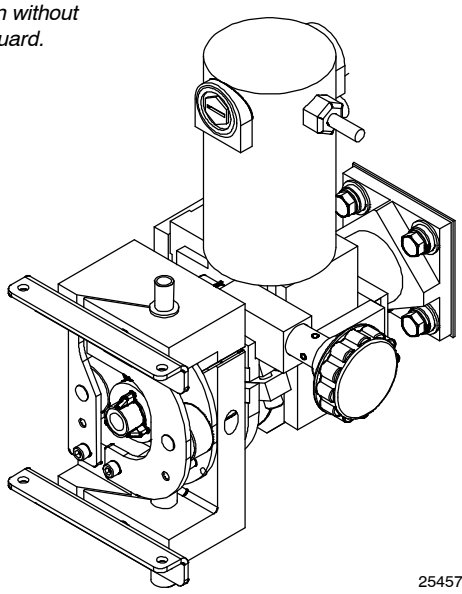

254579-C / 254695-C

1 Feed Plate

The feed plate can be set up with the torch in two different locations for tandem arc applications.

**To change the tilt angle adjusting knob to the left side:**

2 Hub Clamp Screw

Loosen hub clamp screw.

3 Manipulator Block Screws

Remove manipulator block screws and block assembly.

4 Insert Screws

Remove insert screws.

5 Insert Block

Remove insert block

6 Hub Clamp Assembly

Turn hub clamp assembly 180 degrees.

Reassemble in reverse order of disassembly.

☞ *Re-tighten hardware when the assembly is in the desired position.*

**To change the torch to left of center:**

7 Feed Plate Screw

Loosen feed plate screw.

Turn feed plate 180 degrees.

Re-tighten feed plate screw.

8 Inlet Guide

Remove inlet guide and install in correct position.

## 6-20. Flux Hopper Digital Low Voltage Installation And Loading

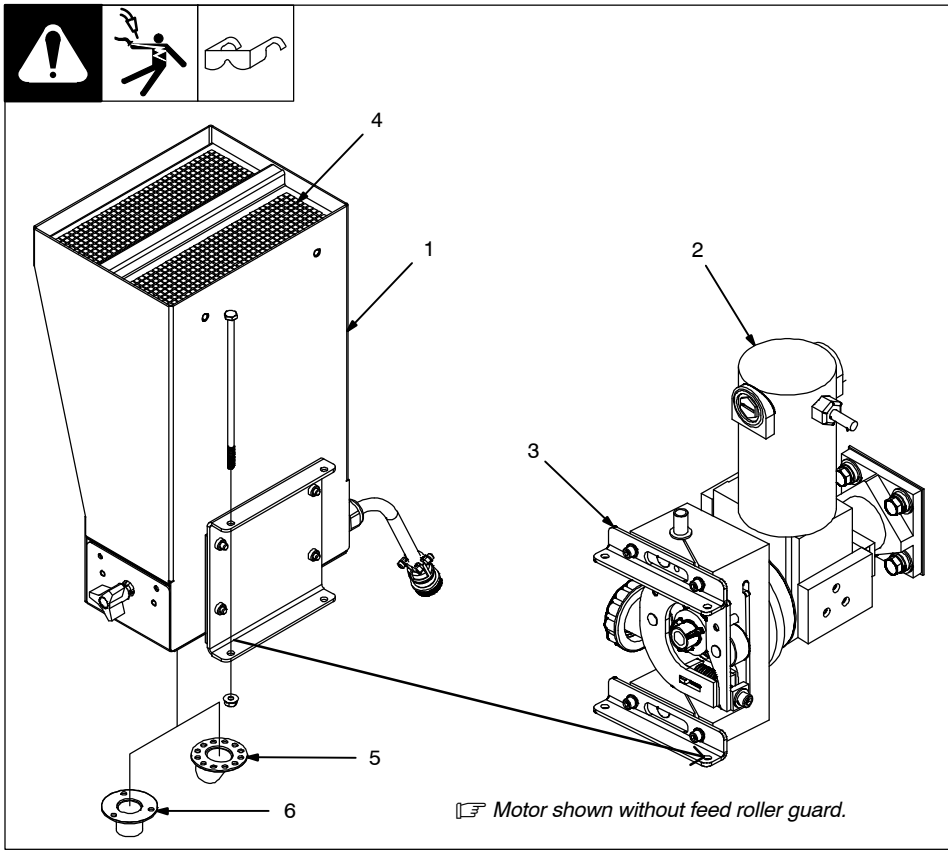


☞ *Motor shown without feed roller guard.*

1 Flux Hopper

2 Wire Drive

3 Mounting Brackets

Mount flux hopper to wire drive using mounting brackets and screws provided with wire drive.

4 Lift-Out Screen

A lift-out screen is supplied to screen slag and large particles from used flux.

Ensure that the flux valve is closed while loading. If a flux recovery system is installed on the hopper, open cover of recovery box to load or add flux.

5 30° Outlet For OBT-600 Torch

6 Straight Outlet For OBT-1200 Torch

Use proper outlet for torch.

Tools Needed:

7/16 in.

3/16 in.

267344-B / 254579-C

## 6-21. Manual Flux Hopper Installation And Loading

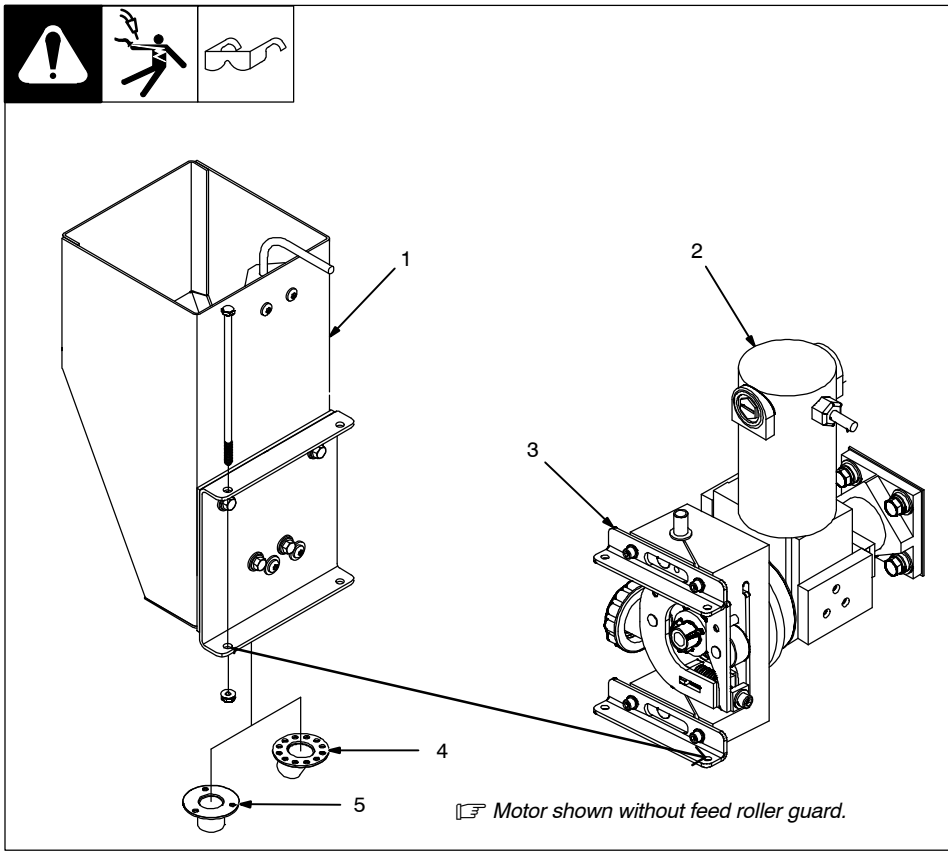


☞ *Motor shown without feed roller guard.*

1 Manual Flux Hopper

2 Wire Drive

3 Mounting Brackets

Mount flux hopper to wire drive using mounting brackets and screws provided with wire drive.

Ensure that the flux valve is closed while loading. If a flux recovery system is installed on the hopper, open cover of recovery box to load or add flux.

4 30° Outlet For OBT-600 Torch

5 Straight Outlet For OBT-1200 Torch

Use proper outlet for torch.

Tools Needed:

7/16 in.

3/16 in.

279015-A / 254579-C

# Notes

## DECIMAL EQUIVALENTS

| | |
|---|---|
| 1/64 | .015625 |
| 1/32 | .03125 |
| 3/64 | .046875 |
| 1/16 | .0625 |
| 5/64 | .078125 |
| 3/32 | .09375 |
| 7/64 | .109375 |
| 1/8 | .125 |
| 9/64 | .140625 |
| 5/32 | .15625 |
| 11/64 | .171875 |
| 3/16 | .1875 |
| 13/64 | .203125 |
| 7/32 | .21875 |
| 15/64 | .234375 |
| 1/4 | .25 |
| 17/64 | .265625 |
| 9/32 | .28125 |
| 19/64 | .296875 |
| 5/16 | .3125 |
| 21/64 | .328125 |
| 11/32 | .34375 |
| 23/64 | .359375 |
| 3/8 | .375 |
| 25/64 | .390625 |
| 13/32 | .40625 |
| 27/64 | .421875 |
| 7/16 | .4375 |
| 29/64 | .453125 |
| 15/32 | .46875 |
| 31/64 | .484375 |
| 1/2 | .5 |
| 33/64 | .515625 |
| 17/32 | .53125 |
| 35/64 | .546875 |
| 9/16 | .5625 |
| 37/64 | .578125 |
| 19/32 | .59375 |
| 39/64 | .609375 |
| 5/8 | .625 |
| 41/64 | .640625 |
| 21/32 | .65625 |
| 43/64 | .671875 |
| 11/16 | .6875 |
| 45/64 | .703125 |
| 23/32 | .71875 |
| 47/64 | .734375 |
| 3/4 | .75 |
| 49/64 | .765625 |
| 25/32 | .78125 |
| 51/64 | .796875 |
| 13/16 | .8125 |
| 53/64 | .828125 |
| 27/32 | .84375 |
| 55/64 | .859375 |
| 7/8 | .875 |
| 57/64 | .890625 |
| 29/32 | .90625 |
| 59/64 | .921875 |
| 15/16 | .9375 |
| 61/64 | .953125 |
| 31/32 | .96875 |
| 63/64 | .984375 |
| 1 | 1. |

# SECTION 7 – OPERATION

## 7-1. Weld Control Definitions

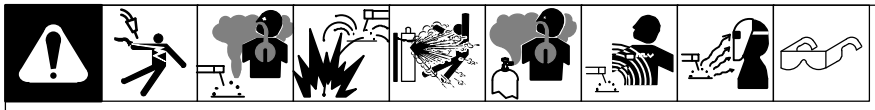

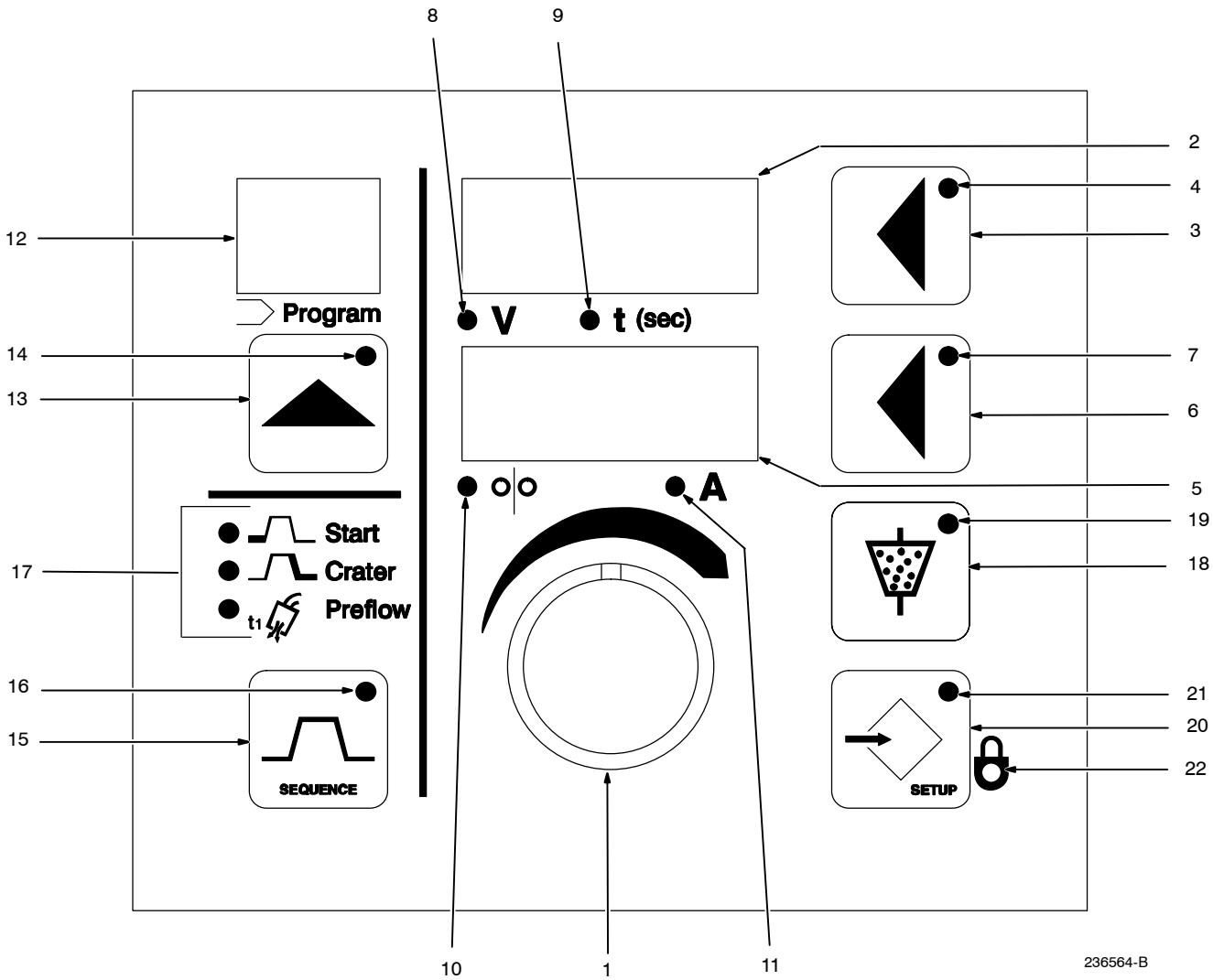


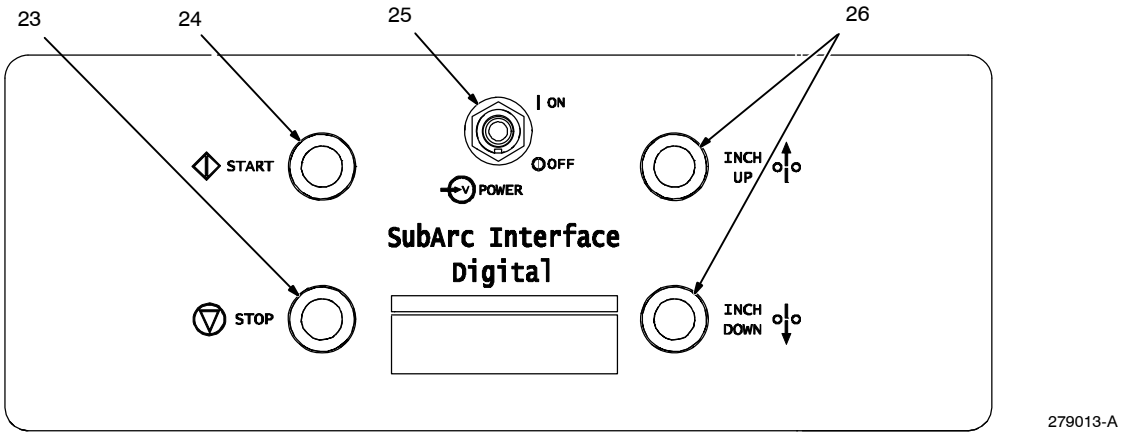

☞ *When the system interface is turned on, it detects the type of power source and motor that are being connected.*

1 Adjust Control

The Adjust control is used to adjust various parameters. Refer to the definition for the function in question for information related to using the Adjust Control.

2 Upper Display

The upper display shows voltage or time. The unit displays both preset and actual arc voltage. When the unit is in a welding state, actual arc voltage is displayed. The upper display shows welding sequence time when the Time LED is illuminated.

3 Upper Display Push Button

Press and hold button to adjust or display weld time. Release button to display voltage.

4 Upper Display Push Button LED

The upper display push button LED illuminates to indicate that information displayed can be changed with the Adjust control.

5 Lower Display

The lower display shows wire feed speed or amperage.

6 Lower Display Push Button

Press button to choose between wire feed speed or amperage functions.

7 Lower Display Push Button LED

The lower display push button LED illuminates to indicate that information displayed can be changed with the Adjust control.

8 Volts LED

9 Time LED

10 Wire Feed Speed LED

11 Amps LED

The LEDs below each display illuminate to indicate which value is being displayed.

12 Program Display

The number of the active program is displayed here.

13 Program Push Button

Press the Program push button to activate the program select feature. To change the program number, press the Program push button, or rotate the Adjust control.

14 Program Push Button LED

The LED lights to indicate the Program push button is active.

☞ *For more information on setting sequence parameters See Section 7-3.*

15 Sequence Push Button

The Sequence push button allows the selection of welding sequences. The default sequence is Weld and is active upon power up. Welding sequences other than Weld must be set prior to initiating the arc. When the unit enters a welding state, all sequence display modes are terminated and the weld display mode is activated.

16 Sequence Push Button LED

In the Weld sequence display mode, the sequence push button LED is off. When the Sequence push button is pressed, the LED flashes and continues to flash with subsequent button presses. The LED stops flashing and is off when the unit returns to the Weld sequence display mode.

17 Welding Sequence LEDs

Three welding sequence LEDs are located above the Sequence push button: Start, Crater, and Preflow/Postflow. The applicable LED illuminates to indicate the active welding sequence. The applicable LED will flash when changing the parameter.

18 Flux Push Button

Press the flux push button to open or close the flux valve.

19 Flux Push Button LED

When the Flux push button LED is lit, the flux valve control is open.

☞ *See Section 7-5 for more information on Setup Screens*

20 Setup Push Button

Press the Setup push button to active the setup display mode. Subsequent button presses toggle through the setup screens.

21 Setup Push Button LED

The setup push button LED illuminates when the setup display mode is active.

22 Lock LED

The Lock LED illuminates when locks are active.

23 Stop Switch

End weld process.

24 Start Switch

Start weld process.

25 Power Switch

Turn switch ON to energize the control box. Turn switch OFF to shut down the controller.

26 Inch Up/Inch Down Push Buttons

These Inch or Jog switches are momentary push button switches, which energize only the drive motor, allowing for a cold wire jog. The welding wire jogs at the rate set by the Jog Speed control. To advance the wire out of the torch, press the Inch Down switch. To retract the wire into the torch, press the Inch Up switch.

- To set a sequence time, press the upper display push button repeatedly until time [t] is the active parameter. Use Adjust control to set desired time. To disable, set time to zero.
- The unit defaults to displaying welding voltage when a welding sequence display mode is first entered.

For CV Mode Only:

- At any time during welding, the Adjust control can be used to change the weld wire feed speed when the lower display push button LED is illuminated. Wire feed speed will show on the lower display. After approximately one second of inactivity, the lower display will revert to showing the previously viewed parameter.

For CV+C Mode Only:

- At any time during welding, the Adjust control can be used to change the weld amperage when the lower display push button LED is illuminated. Weld amperage will show in the lower display. After approximately one second of inactivity, the lower display will revert to showing the previously displayed parameter.

General Terms: The following is a list of terms and their definitions as they apply to this product.

| | |
|---|---|
| Sequence | A portion of the weld program, such as preflow, run-in, start, weld, crater, burnback, and postflow. |
| Weld Program | A group of sequences that make up a weld cycle. |

## 7-2. Tractor Interface Definitions

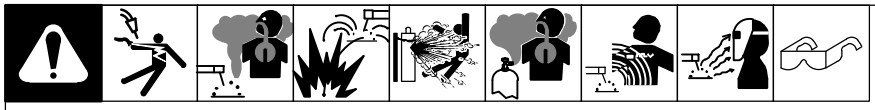

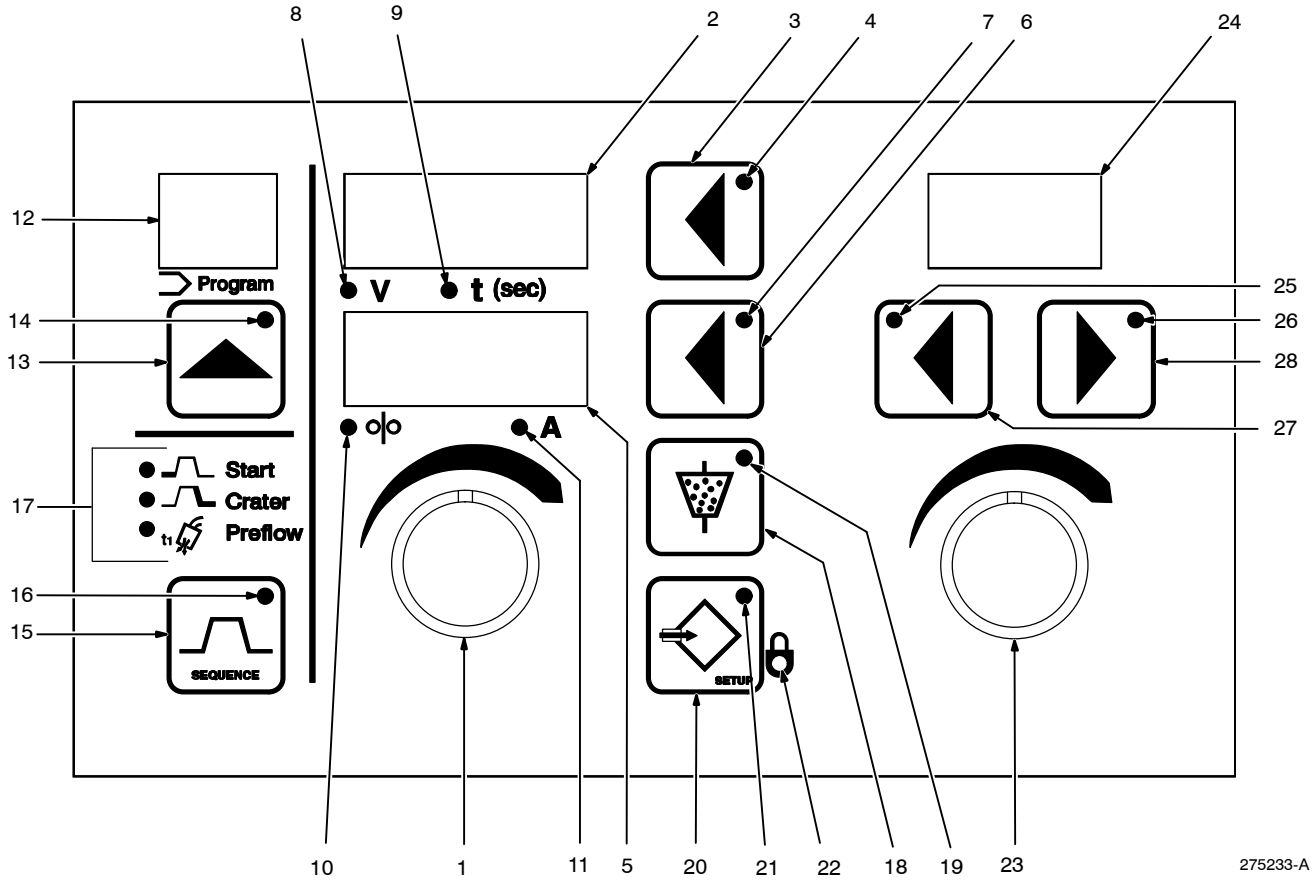


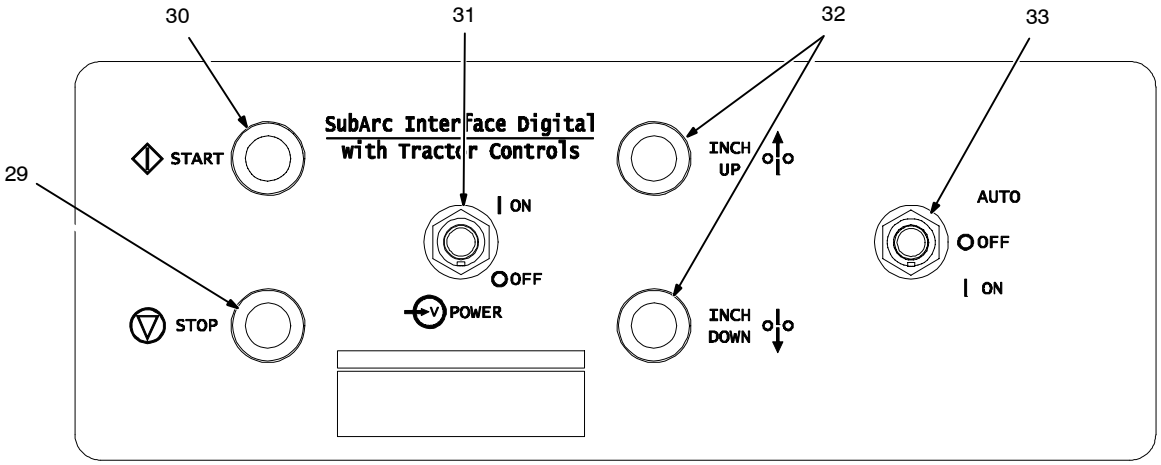

☞ *When the system interface is turned on, it detects the type of power source and motor that are being connected.*

1 Adjust Control

The adjust control is used to adjust various parameters. Refer to the definition for the function in question for information related to using the Adjust Control.

2 Upper Display

The upper display shows voltage or time. The unit displays both preset and actual arc voltage. When the unit is in a welding state, actual arc voltage is displayed. The upper display shows welding sequence time when the Time LED is illuminated.

3 Upper Display Push Button

Press and hold button to adjust or display weld time. Release button to display voltage.

4 Upper Display Push Button LED

The upper display push button LED illuminates to indicate that information displayed can be changed with the Adjust control.

5 Lower Display

The lower display shows wire feed speed or amperage.

6 Lower Display Push Button

Press button to choose between wire feed speed or amperage functions.

7 Lower Display Push Button LED

The lower display push button LED illuminates to indicate that information displayed can be changed with the Adjust control.

8 Volts LED

9 Time LED

10 Wire Feed Speed LED

11 Amps LED

The LEDs below each display illuminate to indicate which value is being displayed.

12 Program Display

The number of the active program is displayed here.

13 Program Push Button

Press the Program push button to activate the program select feature. To change the program number, press the Program push button, or rotate the Adjust control.

14 Program Push Button LED

The LED lights to indicate the Program push button is active.

☞ *For more information on setting sequence parameters See Section 7-3.*

15 Sequence Push Button

The Sequence push button allows the selection of welding sequences. The default sequence is Weld and is active upon power up. Welding sequences other than Weld must be set prior to initiating the arc. When the unit enters a welding state, all sequence display modes are terminated and the weld display mode is activated.

16 Sequence Push Button LED

In the Weld sequence display mode, the sequence push button LED is off. When the Sequence push button is pressed, the LED flashes and continues to flash with subsequent button presses. The LED stops flashing and is off when the unit returns to the Weld sequence display mode.

17 Welding Sequence LEDs

Three welding sequence LEDs are located above the Sequence push button: Start, Crater, and Preflow/Postflow. The applicable LED illuminates to indicate the active welding sequence. The applicable LED will flash when changing the parameter.

18 Flux Push Button

Press the flux push button to open or close the flux valve.

19 Flux Push Button LED

When the Flux push button LED is lit, the flux valve control is open.

☞ *See Section 7-5 for more information on Setup Screens*

20 Setup Push Button

Press the Setup push button to active the setup display mode. Subsequent button presses toggle through the setup screens.

21 Setup Push Button LED

The setup push button LED illuminates when the setup display mode is active.

22 Lock LED

The Lock LED illuminates when locks are active.

23 Tractor Speed Control

The tractor travel speed adjust control is used to adjust the travel speed of the tractor.

24 Tractor Speed Display

The tractor speed display shows the preset or actual travel speed of the tractor.

25 Left Tractor Push Button LED

The travel direction push button LED illuminates to indicate that the direction chosen is active.

26 Right Tractor Push Button LED

The travel direction push button LED illuminates to indicate that the direction chosen is active.

27 Left Tractor Push Button

Press button to engage tractor in the direction desired.

28 Right Tractor Push Button

Press button to engage tractor in the direction desired.

29 Stop Switch

Ends weld process

30 Start Switch

Starts weld process

31 Power Switch

Turn switch ON to energize the control box. Turn switch OFF to shut down the controller.

32 Inch Up/Inch Down Push Buttons

These Inch or Jog switches are momentary push button switches, which energize only the drive motor, allowing for a cold wire jog. The welding wire jogs at the rate set by the Jog Speed control. To advance the wire out of the torch, press the Inch Down switch. To retract the wire into the torch, press the Inch Up switch.

33 Tractor Mode Switch

Switch selects the mode of operation for the tractor.

- To set a sequence time, press the upper display push button repeatedly until time [t] is the active parameter. Use Adjust control to set desired time. To disable, set time to zero.
- The unit defaults to displaying welding voltage when a welding sequence display mode is first entered.

For CV Mode Only:

- At any time during welding, the Adjust control can be used to change the weld wire feed speed when the lower display push button LED is illuminated. Wire feed speed will show on the lower display. After approximately one second of inactivity, the lower display will revert to showing the previously viewed parameter.

For CV+C Mode Only:

- At any time during welding, the Adjust control can be used to change the weld amperage when the lower display push button LED is illuminated. Weld amperage will show in the lower display. After approximately one second of inactivity, the lower display will revert to showing the previously displayed parameter.

General Terms: The following is a list of terms and their definitions as they apply to this product.

| | |
|---|---|
| Sequence | A portion of the weld program, such as preflow, run-in, start, weld, crater, burnback, and postflow. |
| Weld Program | A group of sequences that make up a weld cycle. |

## 7-3. Welding Sequence Displays

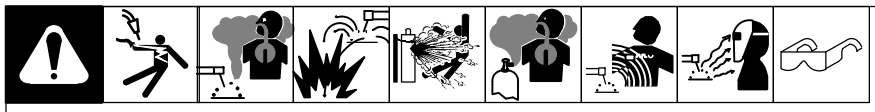

◓ = LED Flashing ☀ = LED On

Start:

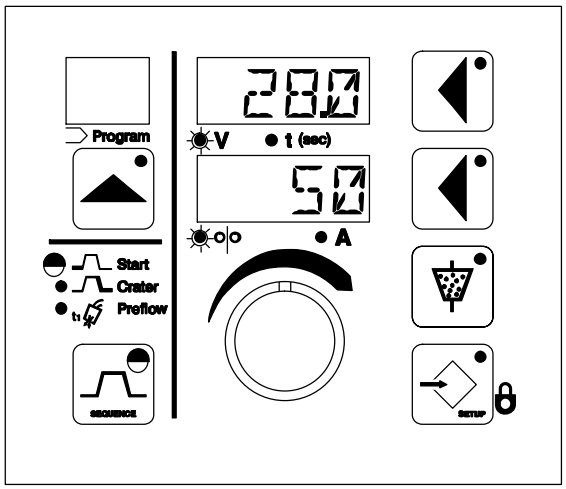


Crater:

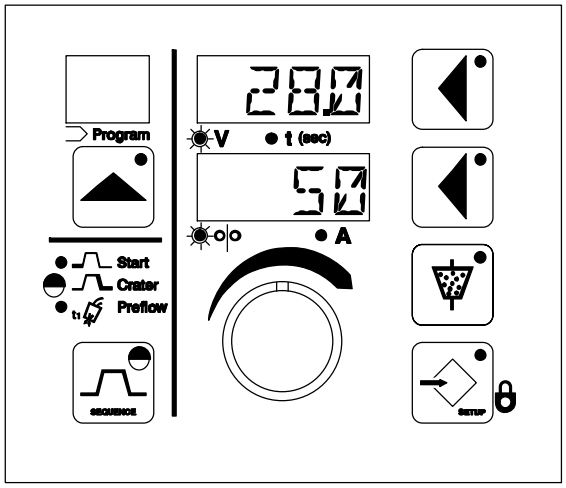


CV mode – Start and Crater display wire feed speed in lower display.

CV+C mode – Start and Crater display amps in lower display.

For all modes – When upper display push button LED is lit, use Adjust control to change corresponding display value. If the upper display push button LED is not lit and adjustments are desired, press the Upper Display push button to turn on the LED. Pressing the button again will toggle between voltage and time. The Volts or Time LED will illuminate to indicate which value is being displayed.

If the lower display push button LED is lit, use the Adjust control to change the value.

- Press Sequence push button, and the sequence push button LED and Start LEDs flash. In this condition, the unit is in the Start sequence display mode, and Start sequence parameters are shown in the displays.
- Press Sequence push button a second time, and the sequence push button LED and the Crater sequence LED flash. In this condition, the unit is in the Crater sequence display mode and the Crater sequence parameters are shown in the displays.
- Press Sequence push button a third time, and the sequence push button LED and the Preflow/Postflow sequence LED flash.

  Press the lower display button to select between preflow and postflow.
  In the Preflow display mode, the upper display shows the preflow time and PRE is shown in the lower display. To change the preflow time, press the upper display button and turn the Adjust control.

  In Postflow display mode, the upper display shows the postflow time and POST is shown in the lower display. To change the postflow time, press the upper display and turn the Adjust control.

Pre/PostFlow:

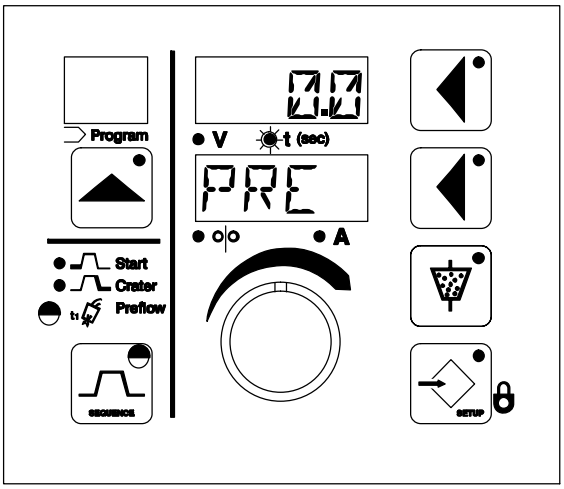


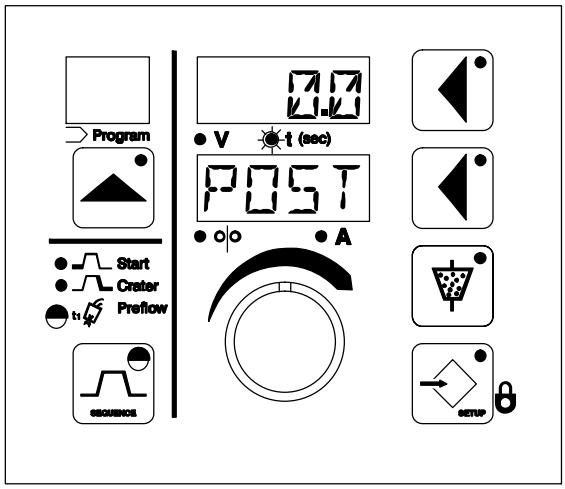


236564-B

## 7-4. Sequence Parameters In A Program

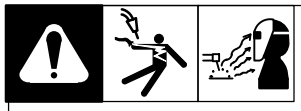

☞ *For more information on Sequence push buttons, see Section 7-3.*

If time is set to zero in Weld sequence, welding continues until stop button is pressed.

If time is set to zero in any timed sequence except Weld, the sequence is skipped.

| Sequence | Parameters | | | |
|---|---|---|---|---|
| | Volts (CV or CV+C) | Amps (CV+C) | Wirespeed (CV) | Seconds |
| 1. Preflow | | | | 0.0-10.0 |
| 2. Run-In | | | X | |
| 3. Start | X | X | X | 0.00-10.00 |
| 4. Weld | X | X | X | 0.0-600.0 |
| 5. Crater | X | X | X | 0.00-10.00 |
| 6. Burnback | X | X | X | 0.00-10.00 |
| 7. Postflow | | | | 0.0-10.0 |

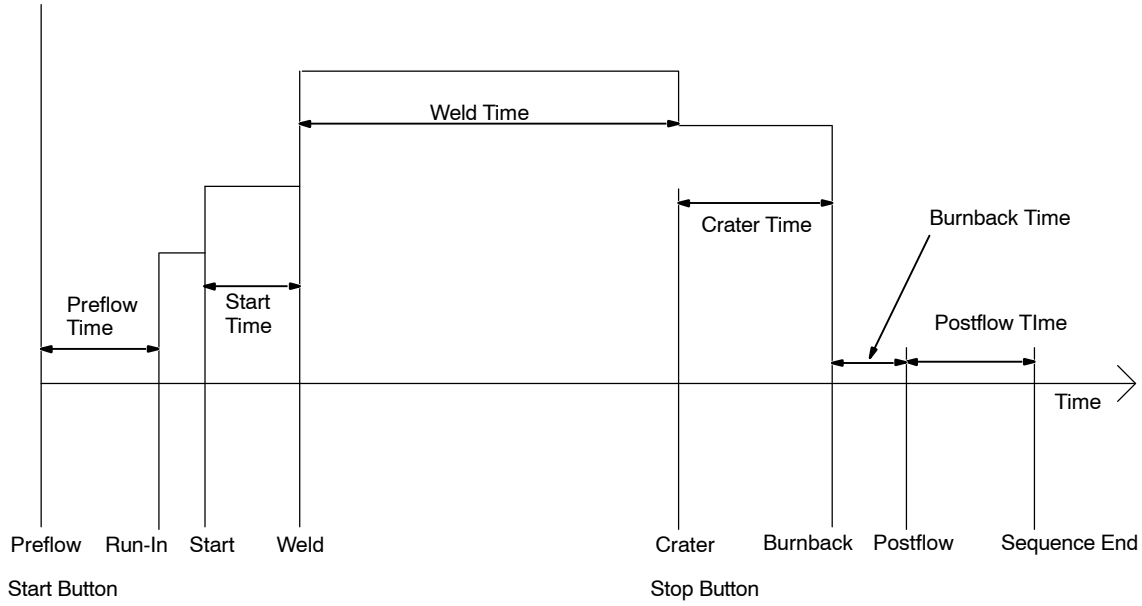

## 7-5. Setup Screens

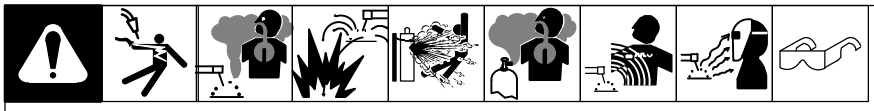

◓ = LED Flashing ✷ = LED On

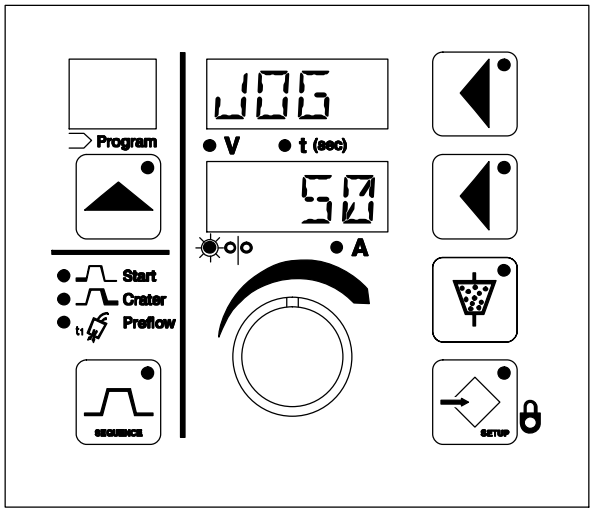


☞ *Press the setup push button to enter the setup screens. If the parameter is program specific, the active program is displayed in the program display. The active program can be changed by pressing the Program push button and then selecting the desired program with the Adjust control.*

- Jog

  The jog speed selection, indicated by JOG in the upper display, can be changed by turning the Adjust control. The jog wire feed speed setting is the same for all programs. The jog wire feed speed may also be adjusted while the Inch Up or Inch Down button are pressed.

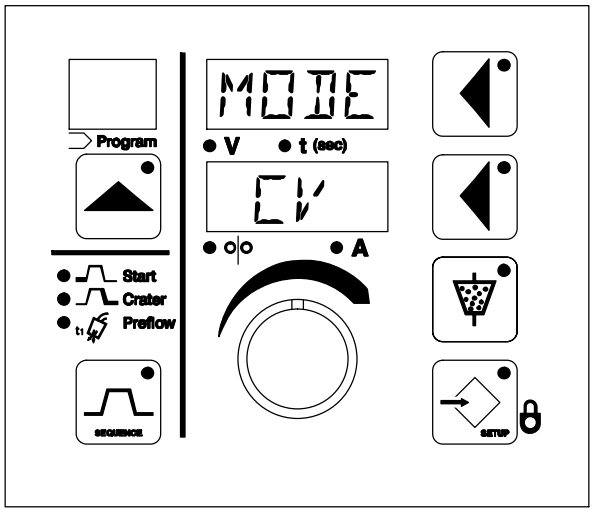


- Mode

  Welding mode, indicated by MODE in the upper display, is set to CV for constant voltage or CV+C for constant voltage plus current, indicated in the lower display. Use the Adjust control to change the mode when the lower display push button LED is lit. This setting is program specific.

## 7-5. Setup Screens (Continued)

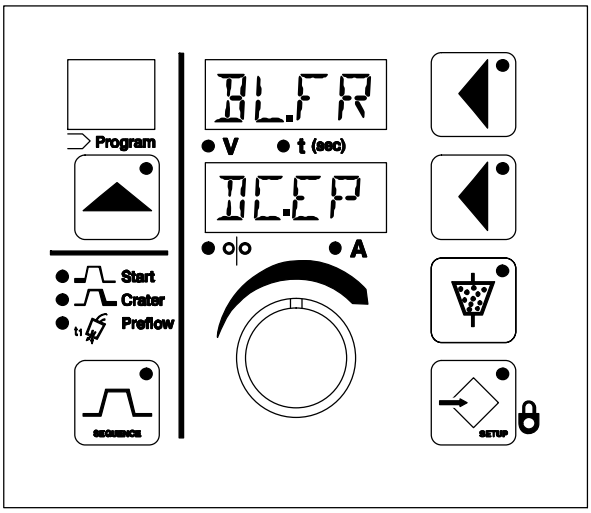


- Balance (AC Units Only)

  Balance selection, indicated by BL.FR in the upper display, adjusts the AC balance and frequency, shown on the lower display. The first two digits indicate the positive balance value followed by a decimal point. The two digits after the decimal point indicate frequency. The balance and frequency are dependent on one another, and cannot be individually adjusted. Use the Adjust control to change this parameter when the lower display push button LED is lit. This setting is program specific (see Table 7-1 for a list of available balances and frequency).

### Table 7-1. Balance/ Frequency

| Balance %Positive/%Negative | Display | |
|---|---|---|
| | 60 Hz Line Input (US) | 50 Hz Line Input (EU) |
| 100/0 | DC.EP | DC.EP |
| 80/20 | 80.18 | 80.15 |
| 75/25 | 75.23 | 75.19 |
| 70/30 | 70.18 | 70.15 |
| 67/33 | 67.30 | 67.25 |
| 60/40 | 60.18 | 60.15 |
| 50/50 | 50.30 | 50.25 |
| 50/50 | 50.18 | 50.15 |
| 40/60 | 40.18 | 40.15 |
| 33/67 | 33.30 | 33.25 |
| 30/70 | 30.18 | 30.15 |
| 25/75 | 25.23 | 25.19 |
| 20/80 | 20.18 | 20.15 |
| 0/100 | DC.EN | DC.EN |

## 7-5. Setup Screens (Continued)

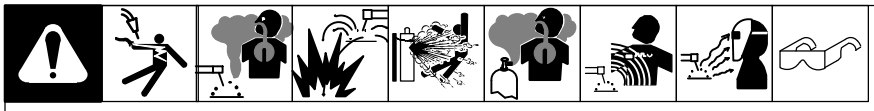

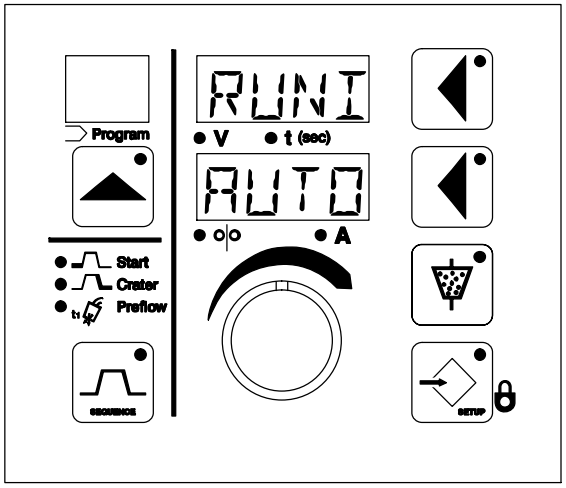


- Run-In

  The run-in selection, indicated by RUNI in the upper display, is set to automatic, off, or manual run-in wire speed. The lower display shows AUTO to indicate that automatic run-in is active. The Adjust control can be used to change the setting from AUTO to a run-in speed setting. If a start condition is set, run-in is a percentage of the start wire speed. Otherwise, run-in is a percentage of the weld wire speed. This setting is program specific.

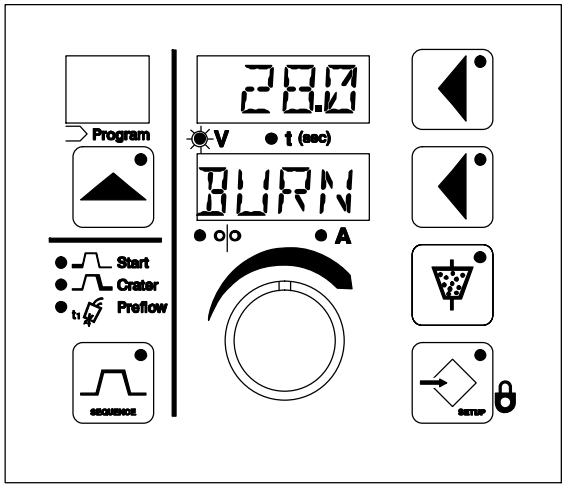


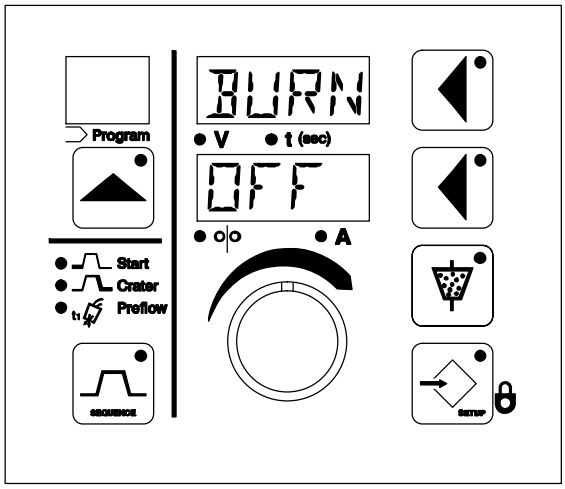


- Burnback

  Burnback voltage and time are specified when the lower display shows BURN and the upper display shows voltage or time. The Adjust control is used to set the desired burnback voltage or time.

  Burnback retract wire speed is specified when the upper display shows BURN and the lower display shows the setting. Burnback may be set to OFF with the lower display push button or changed with the Adjust control.

These settings are program specific.

# Notes

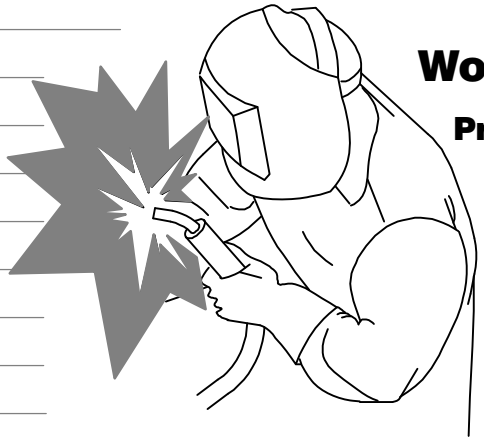

**Work like a Pro!**

**Pros weld and cut safely. Read the safety rules at the beginning of this manual.**

## 7-6. Auxiliary Menus Screens

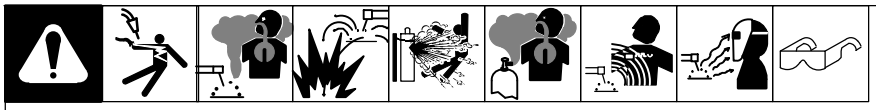

An auxiliary menu is provided when both the Sequence and Setup buttons are pressed simultaneously. The Setup and Sequence button LEDs flash when in the auxiliary menu. Press the Setup button to scroll forward or press the Sequence button to scroll backwards through the auxiliary menu.

☞ *To exit auxiliary menu, press Sequence and Setup simultaneously or press inch up or inch down button.*

Locks

☞ *If locks are active, only locked programs are accessible and the lock LED will be on. To quickly disable the locks for all programs, press the upper and lower display push buttons at the same time.*

☞ *All locks are program dependent and independent of each other. A different value can be set for each lock for each program.*

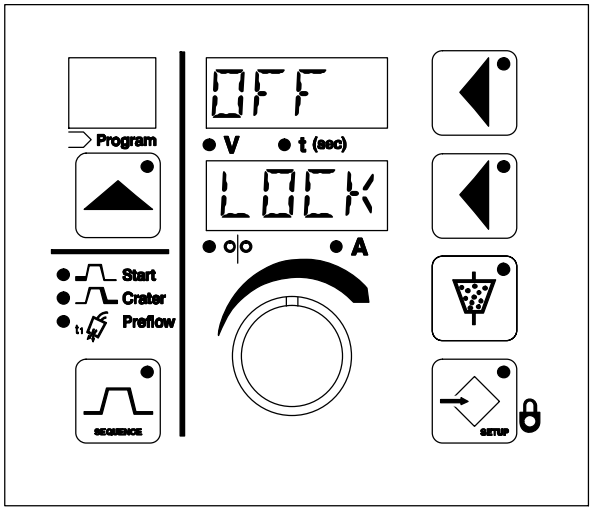


- Voltage Range Lock

  Voltage range lock is active when LOCK is shown in the lower display and the Volts LED is lit. The voltage range lock is off by default and is confirmed by OFF being shown in the upper display. To set a voltage variance between 0 to 10 volts from preset voltage, press the upper display button and rotate the adjust control to the desired voltage. The voltage range lock is program dependent and independent from the wire feed speed and amperage locks. A different voltage variance may be set for each program.

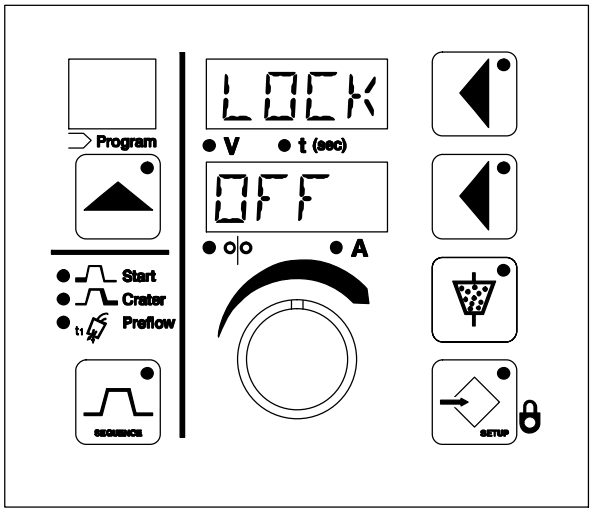


- Amperage Range Lock (For CV+C Mode Only)

  The amperage range lock is indicated by LOCK in the upper display. The amperage range lock is off by default and OFF is shown in the lower display. To set an amperage variance of 0 to 250 amperes from the preset amperage, press the lower display button to illuminate the lower display button LED then turn the Adjust control until the desired amperage variance is set. The Amps LED will illuminate once the parameter is changed from off to a value.

- Wire Feed Speed Range Lock (For CV Mode Only)

  The wire feed speed range lock is indicated by LOCK in the upper display. The wire feed speed range lock is off by default and OFF is shown in the lower display. To set a wire feed speed variance between 0 to 250 ipm (0 to 6.3 mpm) from the preset wire feed speed, press the lower display button to illuminate the lower display button LED then turn the adjust control until the desired wire feed speed variance is set. The Wire Speed LED will illuminate once the parameter is changed from off to a value.

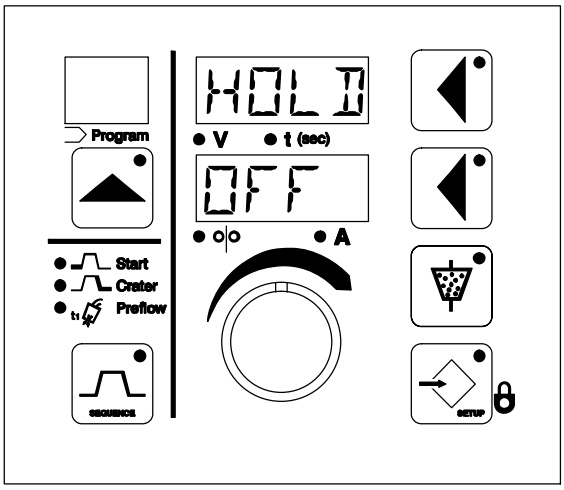


- Lock Hold

  Lock Hold is indicated by HOLD in the upper display. Lock Hold is set to off by default and OFF is shown in the lower display. If Lock Hold is desired, press the lower display push button to illuminate the lower display push button LED then rotate the adjust control to change the setting to ON.

  The Lock Hold feature only works when locks are active and provides the user with the ability to adjust voltage, amperage, or wire feed speed within set limits while welding. When welding stops, voltage, amperage, or wire feed speed adjusted while welding reverts back to the values preset prior to the weld start. If the Lock Hold feature is turned off, adjustments made to the preset values while welding become the new preset values when welding stops.

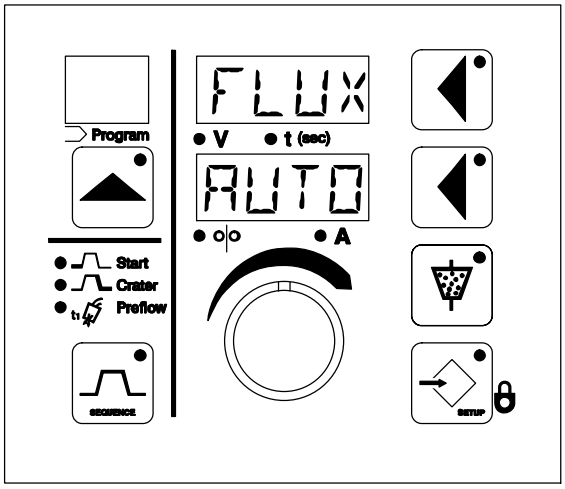


- Flux Valve Control

  Flux valve control, indicated by FLUX in the upper display, is set to AUTO for automatic control or MAN for manual control. Setting the Flux valve control to AUTO energizes the flux hopper when the Start button is pressed and de-energizes the flux hopper when the last sequence is finished. The flux valve control can be overridden by using the flux button. Setting the flux valve control to MAN requires the user to close and open the flux valve relay with the flux button.

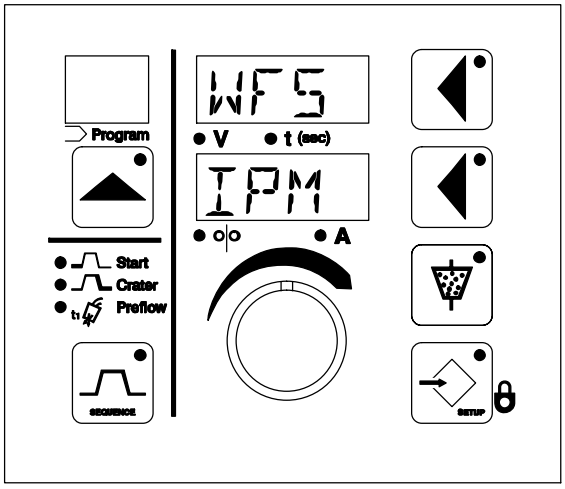


- Wire Feed Speed Setting

  Wire feed speed setting, indicated by WFS in the upper display, can be set to IPM (inches per minute) or MPM (meters per minute). This setting is independent of the program selected.

  In the Tractor Interface Digital the wire feed speed setting changes the tractor travel speed units.

## 7-6. Auxiliary Menus Screens (Continued)

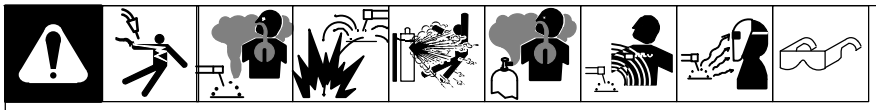

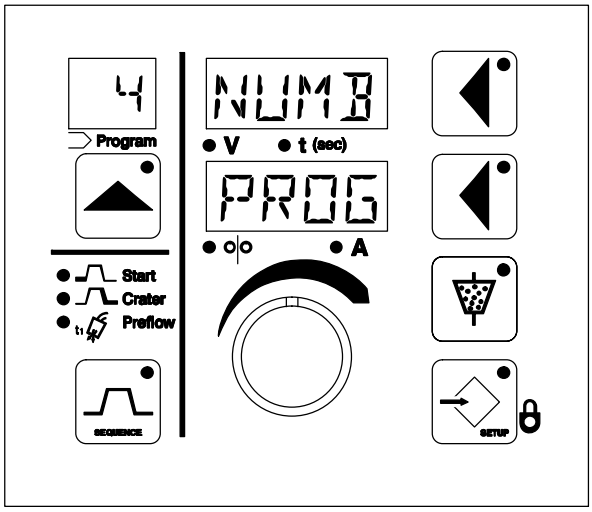


- Number Of Programs

  The number of programs is indicated by NUMB in the upper display and PROG in the lower display. The number of user allowed programs (1 through 15)is shown in the program display. Use the adjust control to change the maximum number of programs that can be accessed.

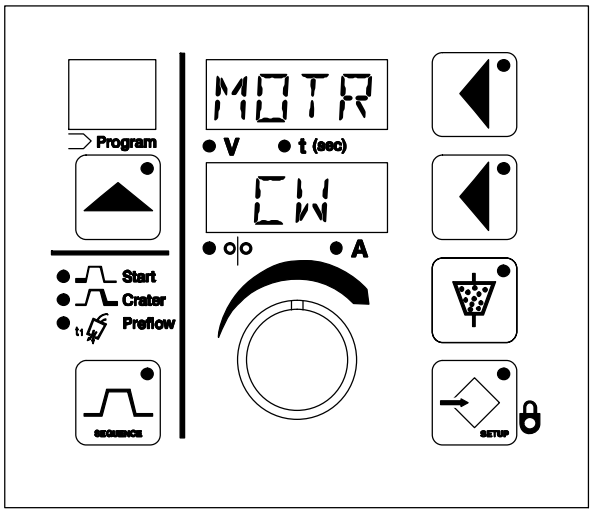


- Wire Drive Motor Rotation

  The motor rotation is indicated by MOTR in the upper display and CW or CCW in the lower display. Changing between CW and CCW changes the rotation of the motor.

☀ = LED On

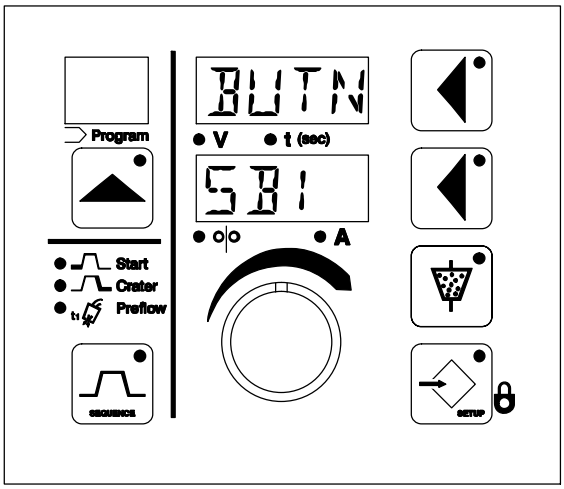


- Motion Control

  Motion control is indicated by SB1 or SB2 in the lower display and is used to set when the side beam relay engages. When "BUTN" is shown in the upper display, the side beam relay will engage when the start button is pressed and preflux has timed out. When a positive time is selected, the side beam relay will engage when the selected time has elapsed after an arc is established. When a negative time is selected, the side beam relay will engage when the start button is pressed, but the weld sequence will not start until the selected time has elapsed.

  SB1 - For SubArc Tractor Interface Digital - Controls the tractor start of motion.

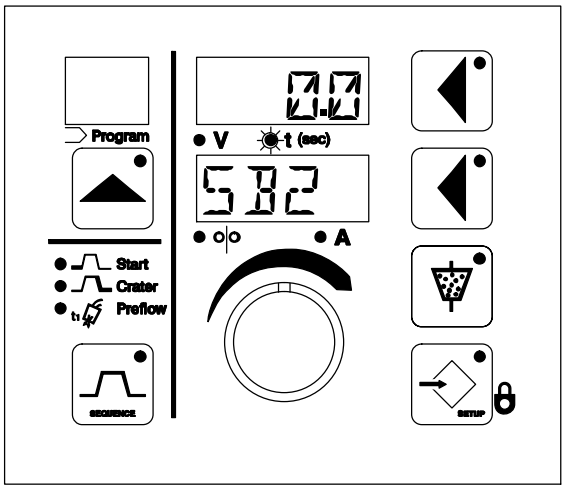


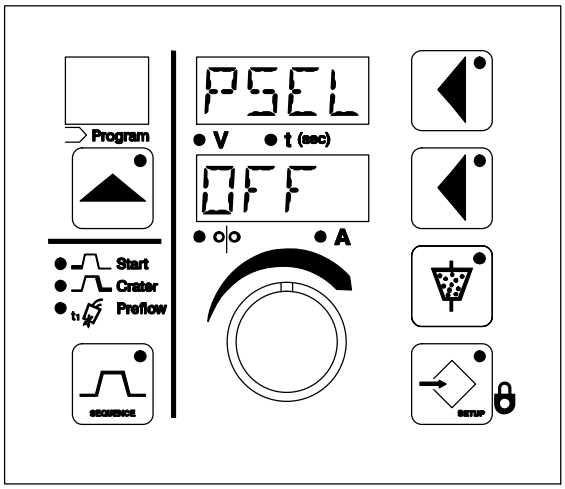


- Remote Program Select
  Remote program select is indicated by PSEL in the upper display. Use adjust control to select ON or OFF. (See section 7-8 Remote Program Select for more information.)

## 7-6. Auxiliary Menus Screens (Continued)

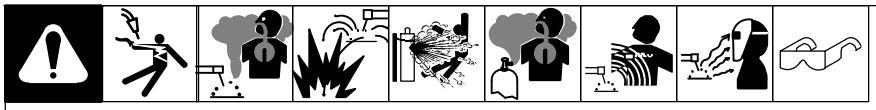

☀ = LED On

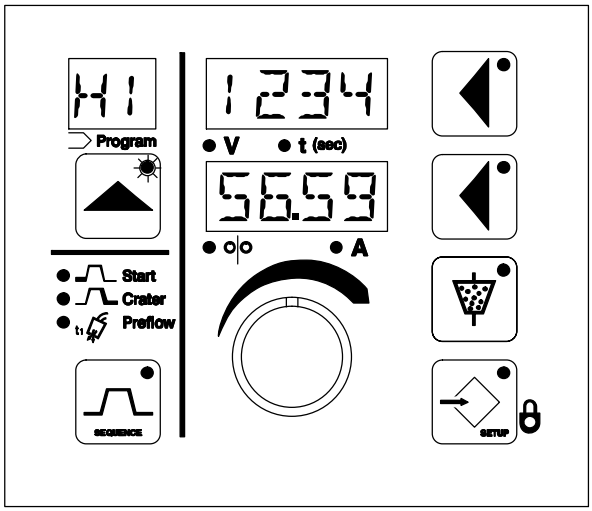


- Arc Time

  When H1 is shown in the program display, the total number of arc hours is shown in the lower display, wrapping to the upper display. The total number of arc hours cannot be reset. When H2 is shown in the program display, the resettable number of arc hours is shown in the lower display, wrapping to the upper display. The resettable number of arc hours is reset by pressing both the upper and lower display buttons at the same time. The number following the decimal point in the lower display shows the number of minutes. Switch between H1 and H2 by using the Adjust control.

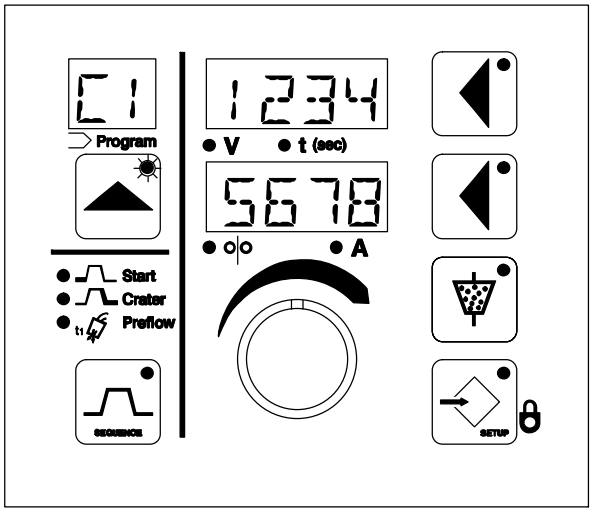


- Cycles

  When C1 is shown in the program display, the total number of arc cycles is shown in the lower display, wrapping to the upper display. The total number of cycles cannot be reset. When “C2” is shown in the program display, the resettable number of arc cycles is shown in the lower display, wrapping to the upper display. The resettable number of arc cycles is reset by pressing both the upper and lower display buttons at the same time. Switch between C1 and C2 by using the Adjust control.

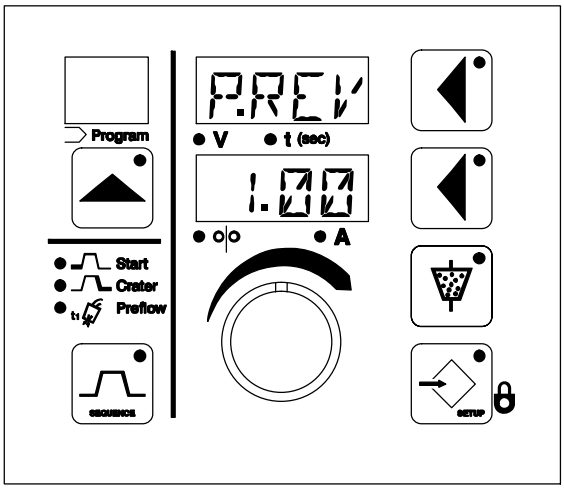


- Software Revision Level

  When P.REV is shown in the upper display, the process control board revision level is shown in the lower display.

  When D.REV is shown in the upper display, the display board or tractor board revision level is shown in the lower display.

  When M.REV is shown in the upper display, the motor control board revision level is shown in the lower display.

  When A.REV revision is shown in the upper display, the automation board revision level is shown in the lower display.

  Switch between board revisions by using the Adjust control.

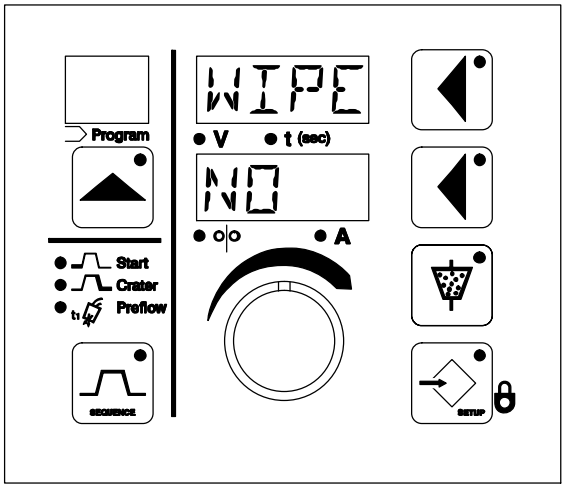


- Reset To Factory Settings

  To access the reset menu and reset to factory default settings, proceed as follows: simultaneously press the Program, Sequence, Upper Display, and Setup buttons. WIPE is displayed on the upper display and NO is displayed on the lower display. The lower display button LED is also lit. Turn adjust control or push lower display button to change lower display from NO to YES. Simultaneously press the Program, Sequence, Upper Display, and Setup buttons again. All parameters except the arc time and cycle count are now reset to factory default settings.

  If a reset is not desired, turn the adjust control until the lower display shows NO and simultaneously press the Program, Sequence, Upper Display, and Setup buttons.

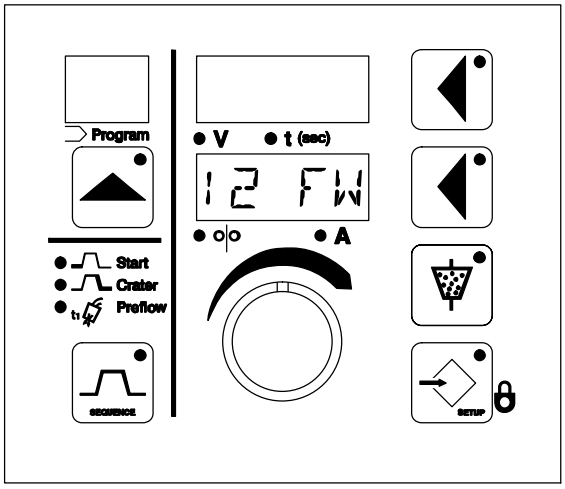


- Preflow/Side Beam/Wire Feed Timeout

  When the Start button is pressed to initiate a weld, the lower display displays up to four specific characters.

  1 – Indicates SB1 has been energized
  2 – Indicates SB2 has been energized
  F – Indicates the flux valve has been activated
  W – Indicates that the motor has begun to feed wire (Run In)

  The characters will display at different times, depending on if there is a preflow time set or if there is a negative time set in the SB menu.

  The top display will count down from the longest preset time, or will display all zeros (0.0).

## 7-7. Tractor Display Screens

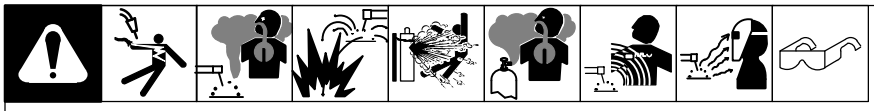

✷ = LED On

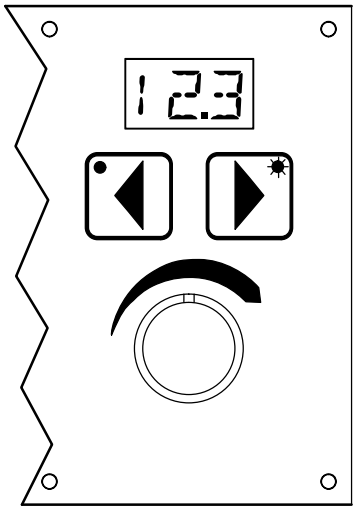


- Normal Tractor Speed Operation

  Display shows metric or imperial units. Illuminated button shows direction of travel. To switch direction, press other button so that LED turns on.

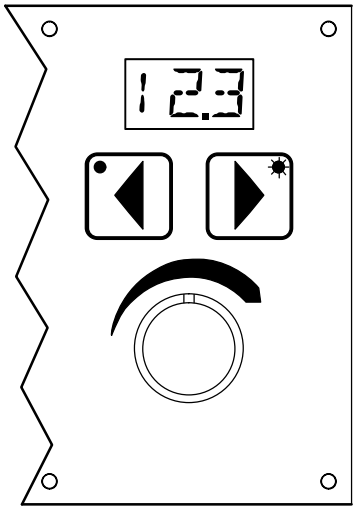


- Toggle Button Functionality

  Factory default configuration: left button equals forward travel, and right button equals backward travel. In certain tractor configurations, the default button arrangement may be opposite to actual travel direction. It is possible to toggle these meanings so the right button selects forward and the left button selects backward tractor travel. When the system is idle, press both left and right buttons for two seconds. After the two seconds the illuminated direction LED will change to the other button indicating the toggle is complete.

☞ *Tractor direction buttons cannot be switched during welding.*

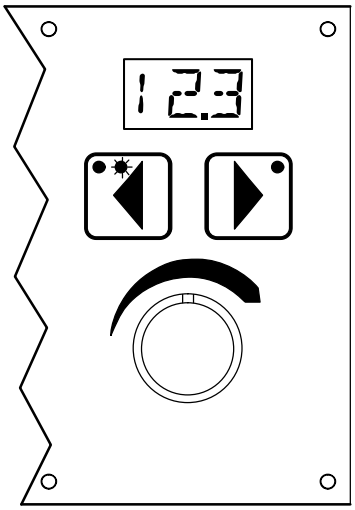


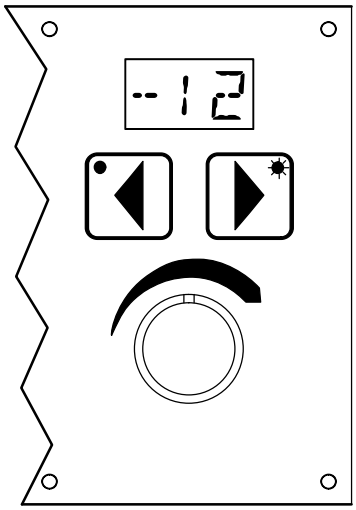


- Tractor Help Codes

  See section 9-7.

Ref. 275233–A

## 7-8. Remote Program Select (For SubArc Interface Digital And Motor Control Digital)

☞ *There are two methods to remotely change programs.*

### Method 1

**Remote Program Select 1**

In the auxiliary menu, turn Remote Program Select Off (see Section 7-6 Remote Program Select).

Connecting Terminal Block TB1 Remote Program Select 1 (see Section 6-9) to Terminal Block TB2 Common (see Section 6-10) will increment the program. Once the last program is reached, connecting Terminal Block TB1 Remote Program to Terminal Block TB1 Remote Common will change the program to the first program.

Example - If the number of programs is set to 4 (see Section 7-6, Number Of Programs) and locks are disabled, then repeatedly connecting and disconnecting Terminal Block TB1 Remote Program Select 1 to Terminal Block TB2 Common will change the programs in the following way:

Program1 –>Program 2 –>Program 3 –>Program 4 –> Program1

**Remote Program Select 2**

In the auxiliary menu, turn Remote Program select Off (see Section 7-6, Remote Program Select).

Connecting Terminal Block TB1 Remote Program Select 2 (see Section 6-9) to Terminal Block TB2 Common (see Section 6-10) will decrement the program. Once the first program is reached, connecting Terminal block TB1 Remote Program Select 2 to Terminal Block TB2 Common will change the program to the last program.

Example – If the number of programs is set to 4 (see Section 7-6, Number Of Programs) and locks are disabled, then repeatedly connecting and disconnecting Terminal Block TB1 Remote Program Select 2 to Terminal Block TB2 Common will change the programs in the following way:

Program 4> Program 3> Program 2> Program 1> Program 4.

If locks are enabled, (see Section 7-6, Locks) Voltage Range Lock or Amperage Range Lock or Wire Feed Speed Range Lock) then the program will be incremented to the next locked program.

### Method 2

In the auxiliary menu, turn remote program select on (see Section 7-6, Remote Program Select). Then one of 4 programs can be selected by connecting to the Remote Program Select Pins to common as shown in the following table.

| Program Selected | Remote Program Select 1 | Remote Program Select 2 |
|---|---|---|
| Program 1 | Not Connected | Not Connected |
| Program 2 | Connected | Not Connected |
| Program 3 | Not Connected | Connected |
| Program 4 | Connected | Connected |

☞ *If locks are enabled (see Section 7-6 Locks) and an unlocked program is selected, a program select error is displayed until a locked program is selected or the remote program select feature is turned off.*
*If method 2 is used, method 2 will automatically disable method 1.*

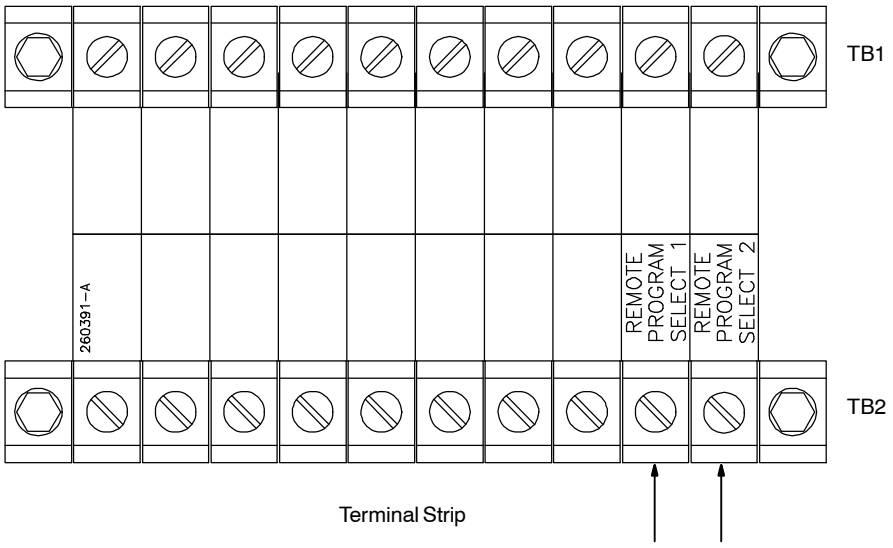


Ref. 267618-A

# SECTION 8 – FLUX HOPPER

## 8-1. Digital Flux Hopper Operation

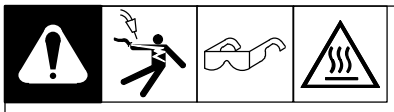

1 Control Cable

Connect control cable to 4-pin receptacle on SubArc Interface.

2 Manual Override Knob

Pull knob to manually release flux. Release knob to stop the flow of flux.

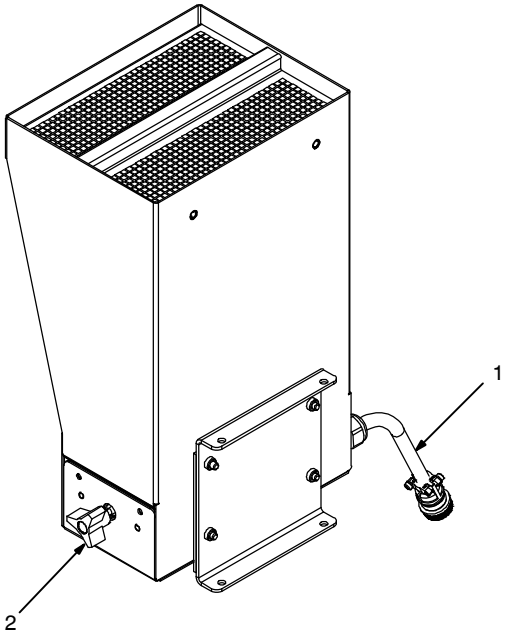


267344-B

## 8-2. Manual Flux Hopper Operation

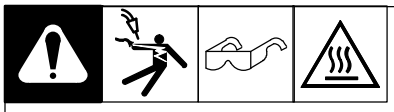

1 Flux Flow Control Lever

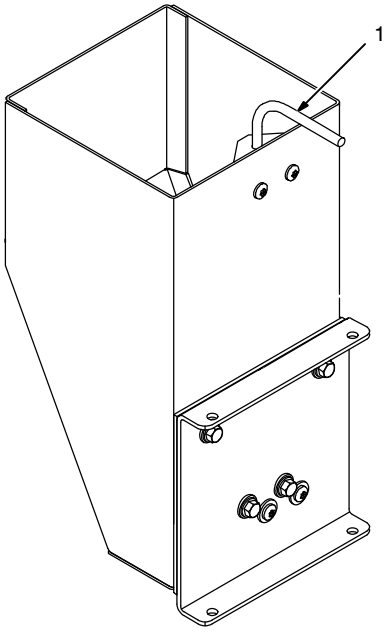


279015-A

# SECTION 9 – MAINTENANCE AND TROUBLESHOOTING

## 9-1. SubArc Interface Digital, Motor Control Digital, Remote Pendant Digital And Tractor Interface Digital Routine Maintenance

**Disconnect power before maintaining.**

| | |
|---|---|
| | ✓ = Check ◇ = Change ◯ = Clean Δ = Repair ☆ = Replace<br>* To be done by Factory Authorized Service Agent |
| Every 3 Months | ✓☆ Labels   ✓Δ ☆Cables And Cords 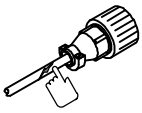 |
| Every 6 Months | 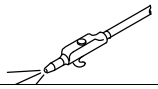 |

## 9-2. Troubleshooting Table For SubArc Interface Digital, Motor Control Digital, Remote Pendant Digital And Tractor Interface Digital

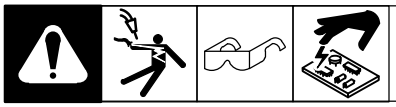

| Trouble | Remedy |
|---|---|
| Unit is completely inoperative. | Check 24 VAC input power and be sure it is energized. |
| Wire does not feed during jogging. | Place Power Switch S1 in On position. |
| | Check 24 volts AC input power and be sure it is energized. |
| | Jog Speed Control set too low; increase Jog Speed setting (see Section 7-5). |
| | Check wire feed motor, and repair or replace if necessary. |
| | Check Inch Up push buttons PB3 and Inch Down push button PB4, and replace if necessary (see Parts List). |
| | Have Factory Authorized Service Agent check control board PC1, and replace if necessary. |
| Wire feeds wrong direction during jogging. | Change wire drive motor rotation setting in the Auxiliary Menu (see Section 7-6). |
| Wire only feeds down whether Inch Down or Up button is pressed. | Have Factory Authorized Service Agent check control board PC1, and replace if necessary. |
| Wire does not feed after Start button is pressed (ensure that all wire feed jogging functions are operating properly before checking this problem). | Check Start switch PB1, and replace if necessary. |
| No wire feed speed control with Wire Speed control during welding. Wire speed remains at the Run–In Wire Speed setting. | Wire feed speed cannot be directly controlled in CV+C mode. |
| | Verify volt sense leads are properly connected. |
| | Have Factory Authorized Service Agent check control board PC1, and replace if necessary. |
| Erratic weld and no control of output. | Check remote voltage sense lead polarity. |

| Trouble | Remedy |
|---|---|
| Tractor does not move. | Ensure that clutch is fully engaged in the drive position. |
| | Ensure that the tractor motor is properly connected to the Tractor Interface Digital. |
| | If using AUTO mode, ensure that the tractor mode switch is fully engaged in the AUTO position. |
| | Check the timing configuration of SB1 in the Auxiliary menu. |
| | Try flipping the tractor mode switch to the ON position. |
| | Have Factory Authorized Service Agent check the Tractor interface board PC1, and replace if necessary. |
| Tractor travels in the ”wrong” direction. | Swap the meaning of the left and right tractor buttons. See section 7-7. |
| Tractor does not start moving after Start button is pressed. | Check the timing configuration of SB1 in the Auxiliary menu. |
| | Check the Start switch PB1, and replace if necessary. |

# Notes

## 9-3. Wire Drive Routine Maintenance

**Disconnect power before maintaining.**

✓ = Check ◇ = Change ● = Clean Δ = Repair ☆ = Replace
* To be done by Factory Authorized Service Agent

| | | | |
|---|---|---|---|
| Every 3 Months |  ✓☆ Labels | 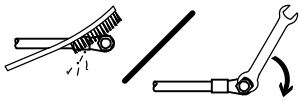 ● Weld Terminals | 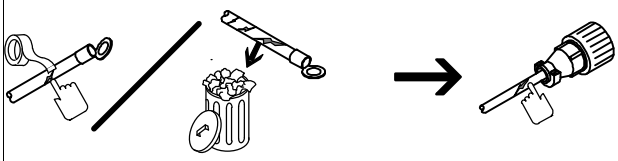 ✓Δ ☆Cables, Cords And Cracked Parts |
| Every 6 Months | 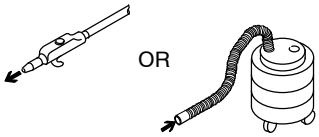 ●:During heavy service, clean monthly. | 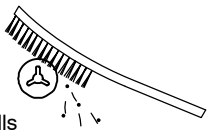 ● Drive Rolls | |

## 9-4. Brush Inspection And Replacement

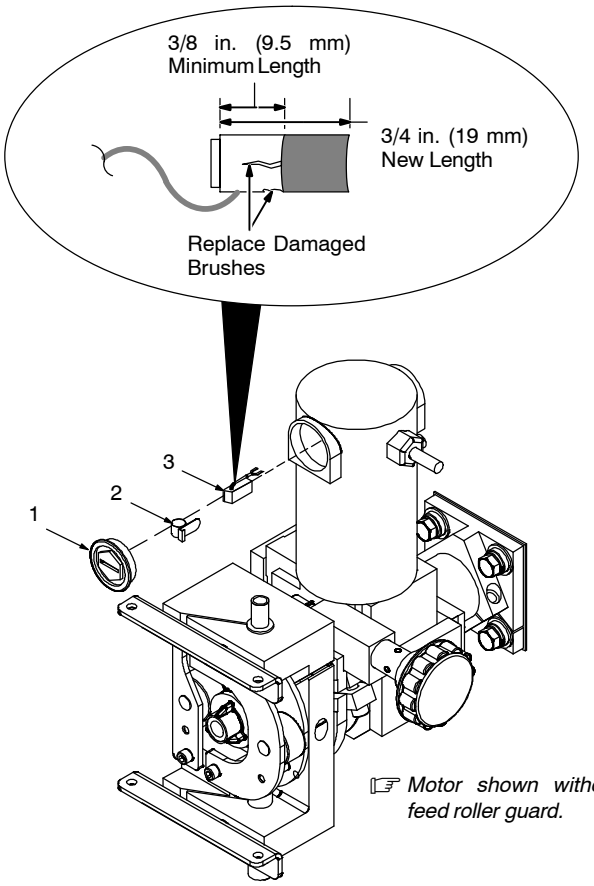


☞ *Motor shown without feed roller guard.*

1 Brush Cap
2 Spring Clip
3 Brush

Remove brush cap. Remove spring clip and brush.

Replace brush if it becomes chipped or broken, or if less than 3/8 in. (9.5 mm) of brush material is left.

Install brush so curved surface on end of brush matches curve of motor. Reinstall spring clip and cap.

Repeat procedure for other brush.

Tools Needed:

Ref. 254695-C / S-0816

## 9-5. Troubleshooting Table For Wire Drives

| Trouble | Remedy |
|---|---|
| Electrode wire feeding stops or feeds erratically during welding. | Readjust hub tension and drive roll pressure. |
| | Change to correct size drive roll. |
| | Clean or replace dirty or worn drive roll. |
| | Check and replace incorrect size or worn wire guides. |
| | Replace contact tip or liner. See gun/torch Owner's Manual. |
| | Remove weld spatter or foreign matter from around gun/torch nozzle opening. |
| | Check and secure motor plug connection; check brushes. |
| | Make sure tension on wire straightener isn't too tight. |
| | Have Factory Authorized Service Agent check drive motor. |
| Motor runs Slowly. | Reduce load. Decrease hub brake tension or drive roll tension. |
| | Make sure tension on wire straightener isn't too tight. |
| | Check for correct input voltage. |
| Motor runs at full speed regardless of wire speed setting. | Check weld control unit for proper operation. |
| Motor runs in reverse direction. | See applicable controller Owner's Manual for changing motor direction and correct wiring instructions. |

## 9-6. Digital Flux Hopper And Manual Flux Hopper Routine Maintenance

**Disconnect power before maintaining.**

| | |
|---|---|
| | ✓ = Check ◇ = Change ◯ = Clean Δ = Repair ☆ = Replace<br>* To be done by Factory Authorized Service Agent |
| Daily | ✓◯:Flux Screen. ✓Δ☆:Flux Hose. |
| Monthly | 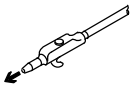 OR 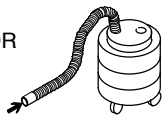 <br>◯:Clean monthly. |
| Periodically Depending On Usage | ✓☆Δ:Flux Outlet Tube. |
| Every 3 Months |   <br>✓☆ Unreadable Labels |

# 9-7. Help Codes

## A. SubArc System

| SubArc Help Code<br>☞ *HELP will display in the upper display, and the code number will display in the lower display.* | SubArc Power Source Status/Trouble Light<br>☞ *Each flash sequence will be followed by a one second pause. The sequence will then repeat.* | Fault | Description |
|---|---|---|---|
| 03 | 3 Slow | See 30 | |
| 04 | 4 Slow | See 40 | |
| 05 | 5 Slow | Primary Circuit Over Temperature | Indicates unit has overheated. Unit has shutdown to allow fans to lower temperature. Operation will continue after unit is within normal temperature range. |
| 06 | 6 Slow | See 60 | |
| 26 | 2 Quick, 6 Slow | Button Stuck On System Interface Motor Control | Indicates button is stuck on the lower half of the SubArc interface upon start up, or Remote Start, Jog Up, or Jog Down is being held low during start up. Fault will clear when button is released. |
| 30 | 3 Quick | Stuck Contactor On Power Source | Indicates stuck contactor on (Output On switch) the power source. Fault will clear when panel switch is set to remote or contactor is released. |
| 32 | 3 Quick, 2 Slow | Coolant Flow Error | Indicates coolant input on TB2 in the SubArc Interface is not connected to common on TB2 (see appropriate Interface OM).<br><br>Check coolant flow and common connections.<br><br>Ensure sensor being used has a normally-open contact. Sensor is only active if a Strip Drive 100 is connected. |
| 40 | 4 Quick | Tach Error | Indicates tach error on motor. Check wire feed drive housing and wire spool for obstructions. Make sure motor cable is not routed with weld cable (If inching works properly, noise may be corrupting the tach signal). If this code continues to appear on the display, contact the nearest Factory Authorized Service Agent. |
| 42 | 4 Quick, 2 Slow | Motor Error | Indicates motor overcurrent error on motor. Check wire feed drive housing and wire spool for obstructions. If this code continues to appear on the display, contact the nearest Factory Authorized Service Agent. |
| 44 | 4 Quick, 4 Slow | Motor Low Bus | Indicates bus voltage in SubArc Interface is low. 24 VAC from power source may be low if input primary line voltage is too low or, for DC power sources, power source could be incorrectly linked. Increase primary line voltage to at least 90% of specified nominal voltage. Check for correct linking on DC power sources. If this code continues to appear, contact nearest Factory Authorized Service Agent. |
| 45 | 4 Quick, 5 Slow | Button Stuck On Display<br>Or<br>Tractor Error | Indicates button is stuck on the digital interface upon power up. Fault will clear when button is released.<br>Or<br>A tractor error is present. The Tractor Speed Display will contain an additional help code indication. Refer to section 9-7-B for more details in specific tractor help codes. |
| 48 | 4 Quick, 8 Slow | Trigger Fault | Indicates an arc was not established with the specified time (lesser of 8 seconds or 4 inches). |
| 56 | 5 Quick, 6 Slow | Modbus Control Fault | Indicates PLC is enabling weld output, flux, or wire jog on initial communication. Clear all control bits of MODBUS 101 to reset. |
| 60 | 6 Quick | Memory Card Fault | Indicates unable to read memory card. Faulty memory card or wrong format. |
| 61 | 6 Quick, 1 Slow | File Read Error | Indicates faulty file on memory card. |
| 62 | 6 Quick, 2 Slow | File Write Error | Indicates full or faulty memory card. |
| 63 | 6 Quick, 3 Slow | Invalid File | Indicates an invalid file on memory card. The system was able to read the file; however, the contents of the file were invalid. Remove card or press any button to clear error. |

## 9-7. SubArc System Help Codes (Continued)

| SubArc Help Code<br>☞ *HELP will display in the upper display, and the code number will display in the lower display.* | SubArc Power Source Status/Trouble Light<br>☞ *Each flash sequence will be followed by a one second pause. The sequence will then repeat.* | Fault | Description |
|---|---|---|---|
| 64 | 6 Quick, 4 Slow | Memory Card Locked | Indicates a save was attempted to a locked card. This refers to the physical switch on the memory card. Unlock the memory card and try again. Try a different memory card. Remove card or press any button to clear error. If this code continues to appear on the display, contact the nearest Factory Authorized Service Agent. |
| 65 | 6 Quick, 5 Slow | Read Only File | Indicates a save was attempted to a file that has been marked read–only. Check with the appropriate person to see if the attributes are read only for a reason (the attributes can be altered using a PC). Use a different card. Remove card or press any button to clear error. |
| 66 | 6 Quick, 6 Slow | No Memory Card Detected | Indicates no memory card detected when a memory card operation was attempted. Insert a card or press any button to clear error. Try a different memory card. If this code continues to appear on the display, contact the nearest Factory Authorized Service Agent. |
| 67 | 6 Quick, 7 Slow | Unsupported Memory Card Format | Indicates the file system is not supported. Memory card side is too small. |
| 71 | 7 Quick, 1 Slow | Invalid Model Type | If paralleling units, firmware in controlling power source does not match firmware in the following power source. Update firmware in both machines to the latest revision. If code continues to display, contact nearest Factory Authorized Service Agent. |
| 72 | 7 Quick, 2 Slow | Invalid Motor Type | Indicates resistor is missing or improperly installed in motor cable. Make sure the motor being used is support by this system (see Section 4-4). Check motor to system interface control cable connection and tighten if necessary (See Section 6-12). If this code continues to appear on the display, contact the nearest Factory Authorized Service Agent. |
| 73 | 7 Quick, 3 Slow | Program Select Error | Indicates an invalid program has been selected using the program select inputs on the terminal strip. The program select is not available because locks are enabled. This error will only occur with program select mode enabled. |
| 92 | 9 Quick, 2 Slow | Parallel Communication Loss | On trail unit – indicates communication cannot be established with lead unit.<br>On lead unit – indicates communication was lost during welding. |
| 93 | 9 Quick, 3 Slow | PLC Communication Loss | Indicates communication with PLC was lost during welding. |
| 94 | 9 Quick, 4 Slow | Automation Interface Communication Loss | Indicates communication with Automation Interface was lost during welding. |
| 95 | 9 Quick, 5 Slow | Serial Communication Loss | Indicates that the Process Control board lost communication with the Motor Control board in the SubArc interface. |
| 97 | 9 Quick, 7 slow | Primary Communication Lost | Power source process control board cannot communicate with the output controller. Power cycle unit. If problem persists, contact the nearest Factory Authorized Service Agent. |
| 98 | 9 Quick, 8 Slow | Serial Communication Loss | Indicates serial communication was initially made and is now malfunctioning. Check SubArc interface/power source control cable connection and tighten if necessary. May appear normally during firmware updates. If this code continues to appear on the display, contact the nearest Factory Authorized Service Agent. |
| 99 | 9 Quick, 9 Slow | Serial Communication Malfunction | Indicates serial communication is malfunctioning. Check SubArc interface/power source control cable connection and tighten if necessary. May appear normally during firmaware updates. If this code continues to appear on the display, contact the nearest Factory Authorized Service Agent. |

## B. Tractor System

| Tractor Help Code | Fault | Description |
|---|---|---|
| –01 | Tractor Not Connected | Indicates that no tractor was detected at power up. Ensure that tractor in connected to the Tractor Interface and cycle power. If this code continues to appear, contact nearest Factory Authorized Service Agent. |
| –02 | Unknown Tractor Connected | Indicates that an unknown Tractor was detected at power up. Ensure a proper tractor is connected to the Tractor Interface and cycle power. If this code continues to appear, contact nearest Factory Authorized Service Agent. |
| –11 | Instantaneous Tractor Motor Overcurrent | Indicates a sudden and large spike of current to the tractor motor was detected. Check that the motor and gears are clear of any obstructions. Check that the tractor and tractor cables travel path is clear of obstructions. Press button to clear help condition. If this code continues to appear, contact nearest Factory Authorized Service Agent. |
| –12 | Average Tractor Motor Overcurrent | Indicates a higher than average current draw by the tractor motor was detected. Check that the motor and gears are clear of any obstructions and grit. Check that the tractor and tractor cables travel path is clear of obstructions or clutter. Press button to clear help condition. If this code continues to appear, contact nearest Factory Authorized Service Agent. |
| –21 | Tractor Encoder Error | Indicates that the speed sensor on the tractor motor is not providing feedback. Check the tractor motor cable for damage. Press button to clear help condition. If this code continues to appear, contact nearest Factory Authorized Service Agent. |
| –22 | Tractor Over Speed | Indicates that the tractor is running 10%, or more, faster than the desired set point. Check that the motor and gears are clear of any obstructions and grit. Check that the tractor and tractor cables travel path is clear of obstructions or clutter. If the tractor weld path is down a severe incline, attempt to decrease the incline. Press button to clear help condition. If this code continues to appear, contact nearest Factory Authorized Service Agent. |
| –23 | Tractor Under Speed | Indicates that the tractor is running 10%, or more, slower than the desired set point. Check that the motor and gears are clear of any obstructions and grit. Check that the tractor and tractor cables travel path is clear of obstructions or clutter. If the tractor weld path is up a severe incline, attempt to decrease the incline. Press button to clear help condition. If this code continues to appear, contact nearest Factory Authorized Service Agent. |

# Notes

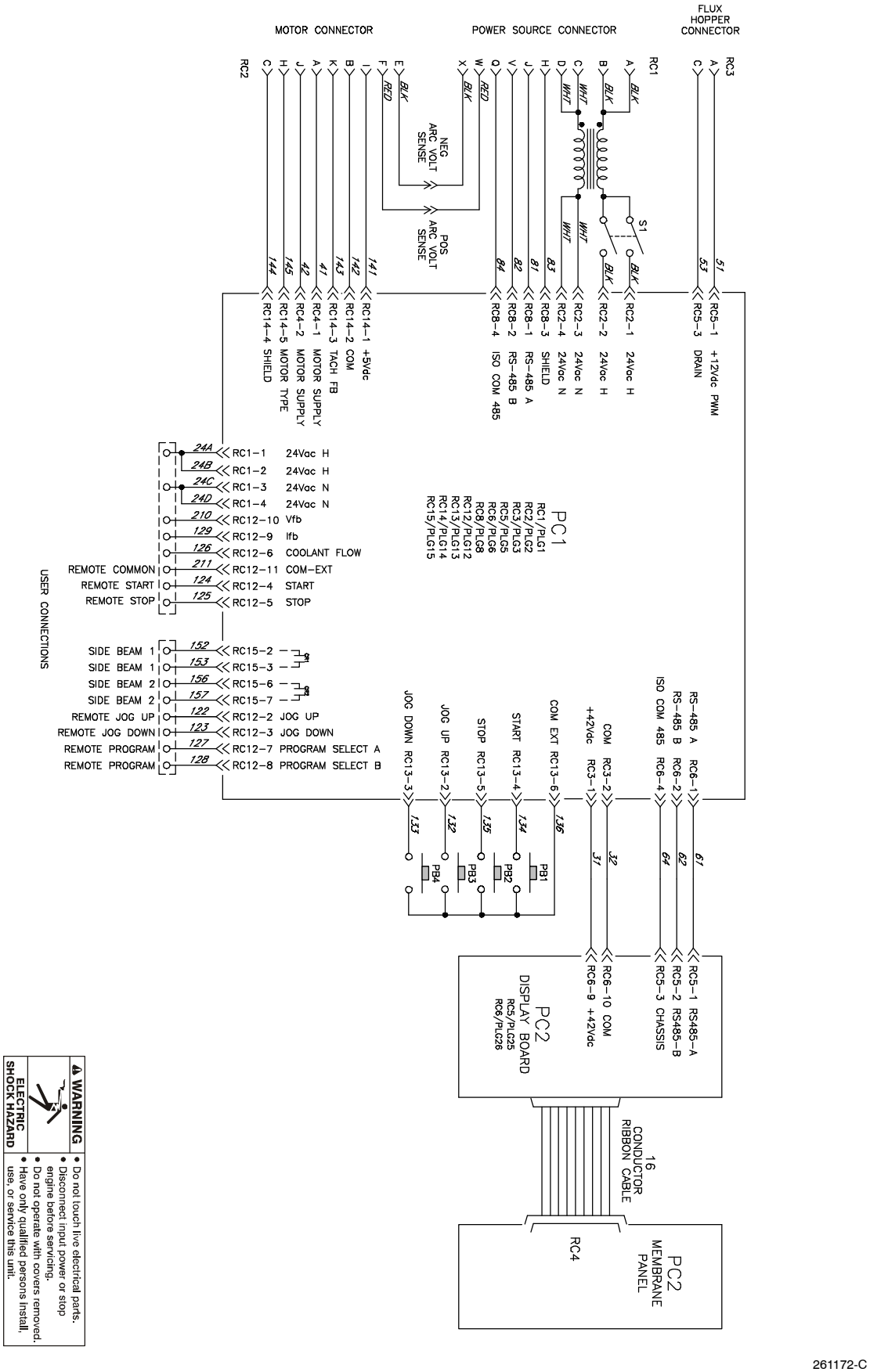


**Figure 10.1. Circuit Diagram For SubArc Interface Digital**

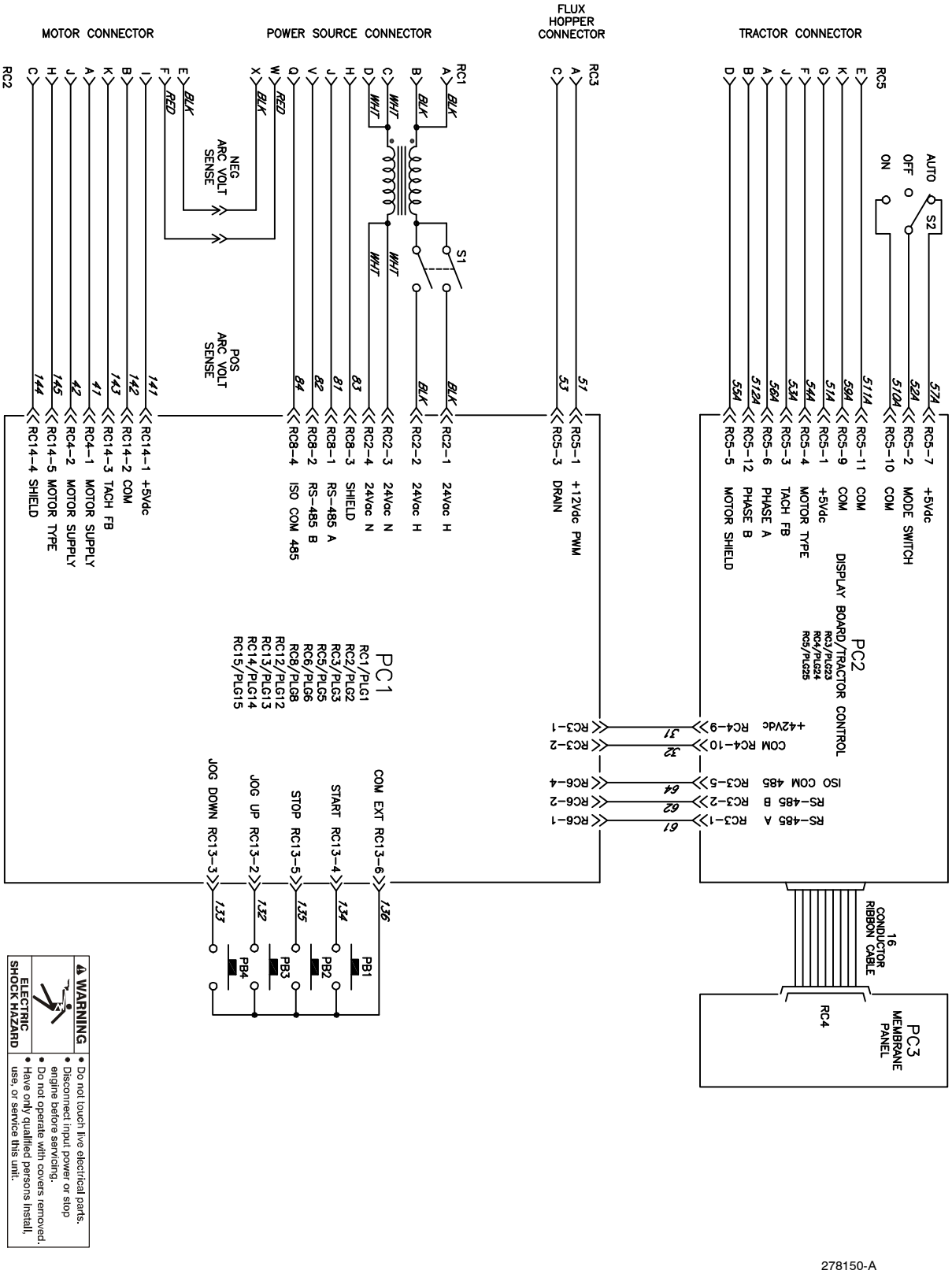


**Figure 10.2. Circuit Diagram For SubArc Tractor Interface Digital**

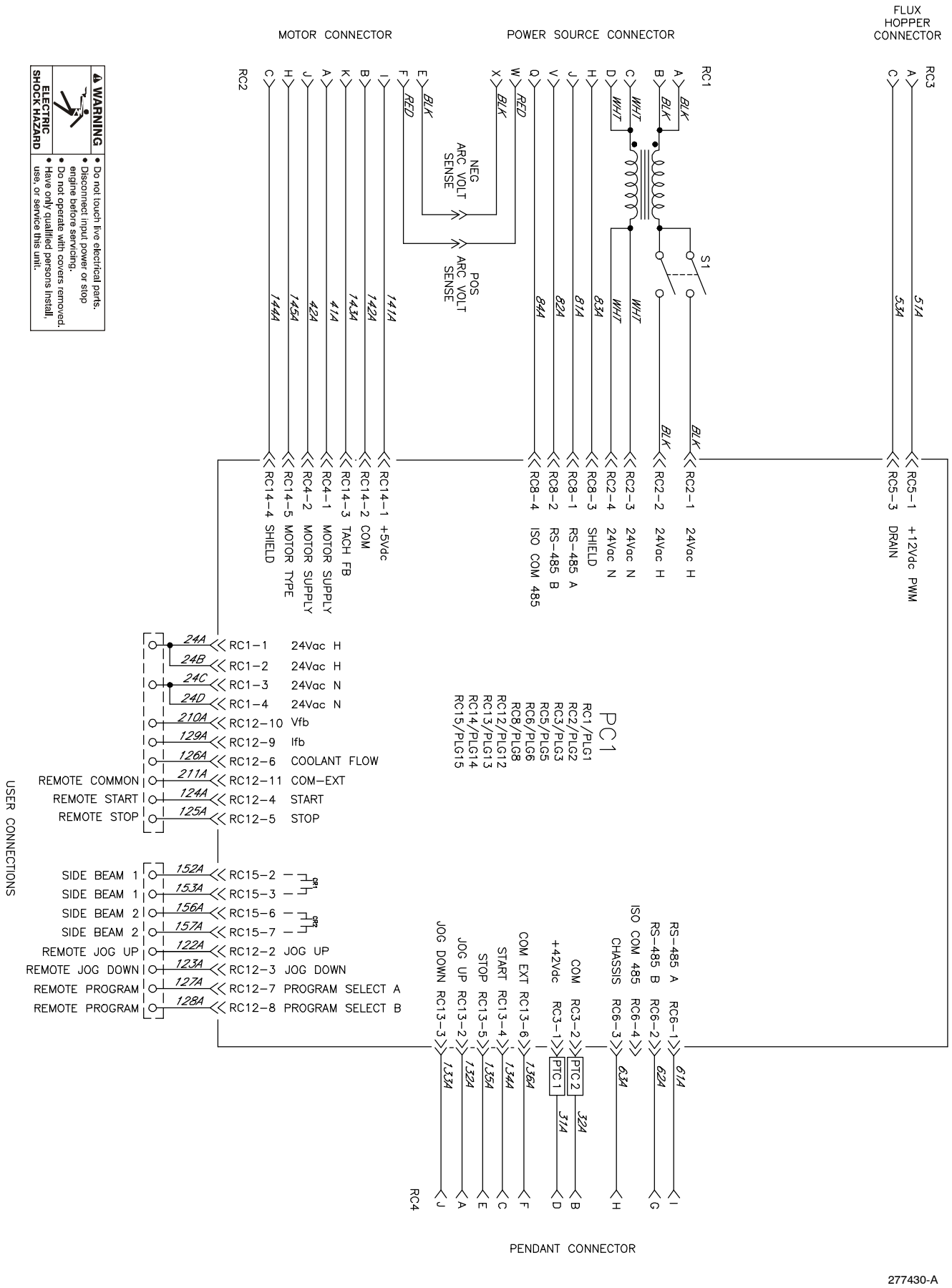


**Figure 10.3. Circuit Diagram For SubArc Motor Control Digital**

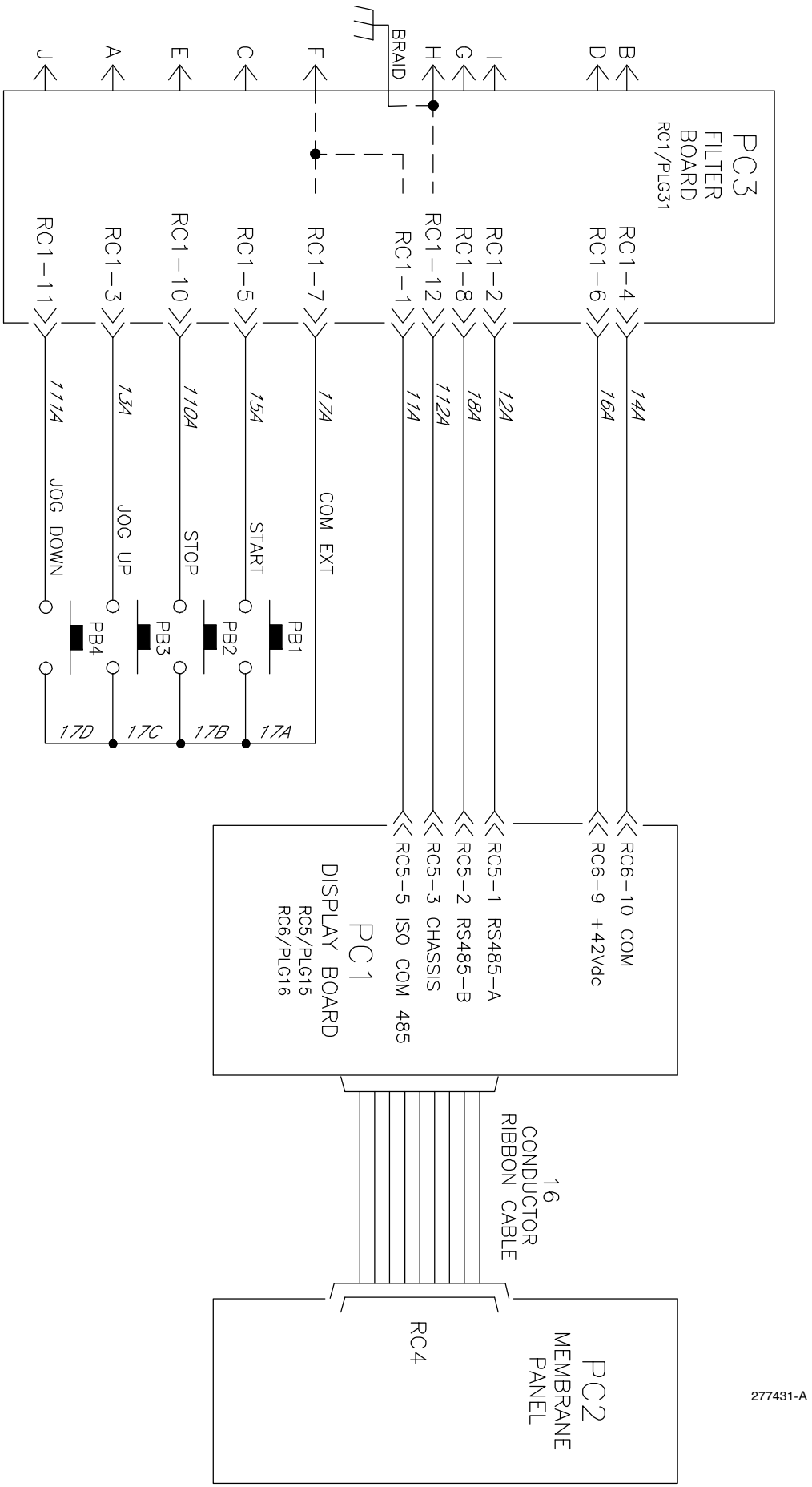


**Figure 10.4. Circuit Diagram For SubArc Remote Pendant Digital**

| ⚠ WARNING | • Do not touch live electrical parts.<br>• Disconnect input power or stop engine before servicing.<br>• Do not operate with covers removed.<br>• Have only qualified persons install, use, or service this unit. |
|---|---|
| ELECTRIC SHOCK HAZARD | |

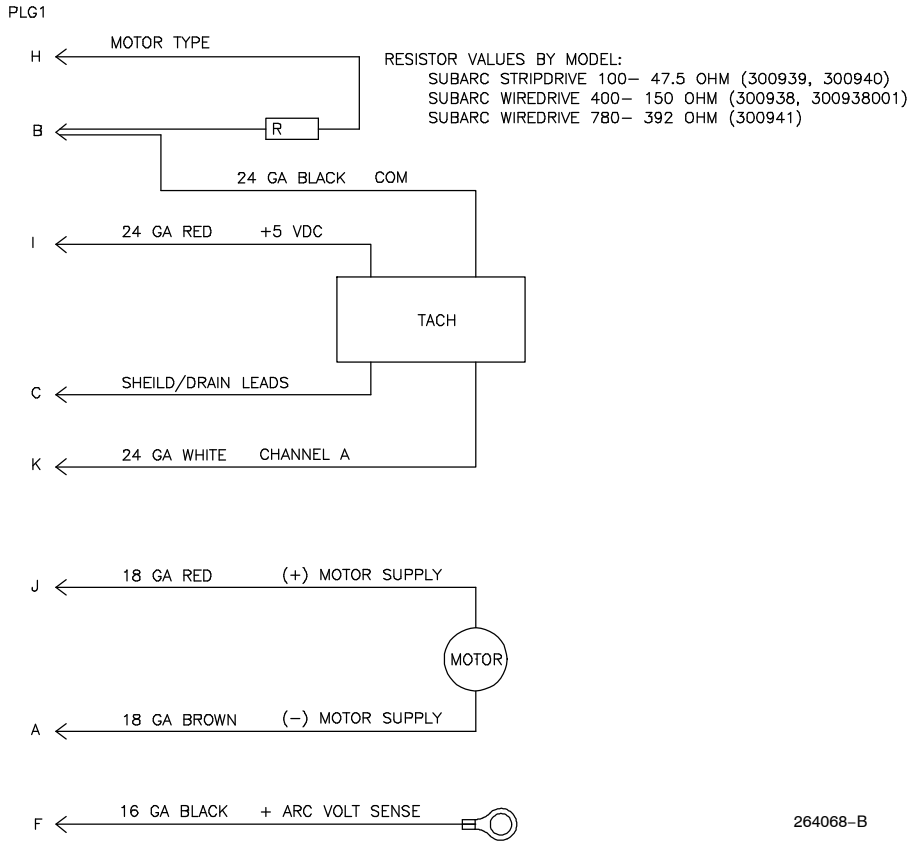


**Figure 10.5. Circuit Diagram For Wire Drives**

| ⚠ WARNING | • Do not touch live electrical parts.<br>• Disconnect input power or stop engine before servicing.<br>• Do not operate with covers removed.<br>• Have only qualified persons install, use, or service this unit. |
|---|---|
| ELECTRIC SHOCK HAZARD | |

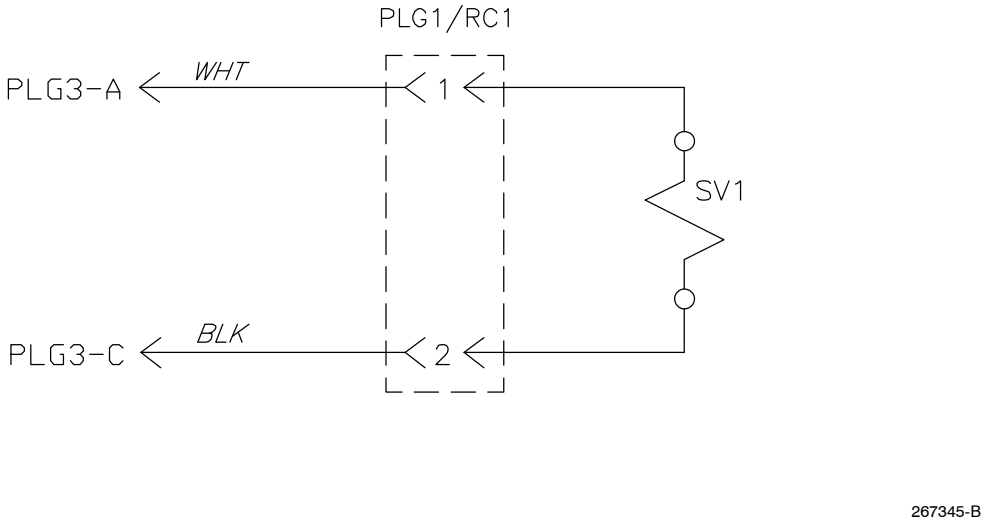


**Figure 10.6. Circuit Diagram For Flux Hopper**

# Notes

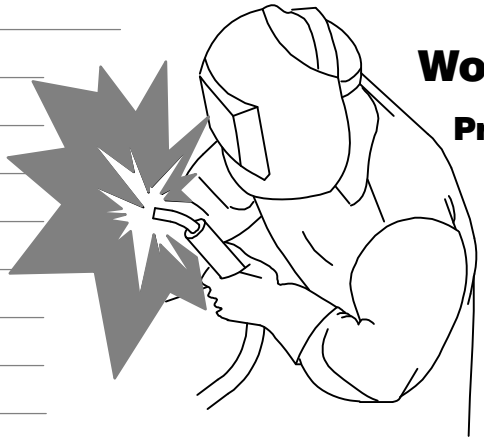

**Work like a Pro!**

**Pros weld and cut safely. Read the safety rules at the beginning of this manual.**

# Notes

*Warranty Questions?*

Call
1-800-4-A-MILLER
for your local
Miller distributor.

Your distributor also gives you ...

**Service**
You always get the fast, reliable response you need. Most replacement parts can be in your hands in 24 hours.

**Support**
Need fast answers to the tough welding questions? Contact your distributor. The expertise of the distributor and Miller is there to help you, every step of the way.

# TRUE BLUE® WARRANTY

## Effective January 1, 2017
## (Equipment with a serial number preface of MH or newer)

This limited warranty supersedes all previous Miller warranties and is exclusive with no other guarantees or warranties expressed or implied.

LIMITED WARRANTY – Subject to the terms and conditions below, Miller Electric Mfg. Co., Appleton, Wisconsin, warrants to its original retail purchaser that new Miller equipment sold after the effective date of this limited warranty is free of defects in material and workmanship at the time it is shipped by Miller. THIS WARRANTY IS EXPRESSLY IN LIEU OF ALL OTHER WARRANTIES, EXPRESS OR IMPLIED, INCLUDING THE WARRANTIES OF MERCHANTABILITY AND FITNESS.

Within the warranty periods listed below, Miller will repair or replace any warranted parts or components that fail due to such defects in material or workmanship. Miller must be notified in writing within thirty (30) days of such defect or failure, at which time Miller will provide instructions on the warranty claim procedures to be followed. If notification is submitted as an online warranty claim, the claim must include a detailed description of the fault and the troubleshooting steps taken to identify failed components and the cause of their failure.

Miller shall honor warranty claims on warranted equipment listed below in the event of such a failure within the warranty time periods. All warranty time periods start on the delivery date of the equipment to the original end-user purchaser, and not to exceed twelve months after the equipment is shipped to a North American distributor or eighteen months after the equipment is shipped to an International distributor.

1. 5 Years Parts — 3 Years Labor
   * Original Main Power Rectifiers Only to Include SCRs, Diodes, and Discrete Rectifier Modules
2. 3 Years — Parts and Labor
   * Auto-Darkening Helmet Lenses (Except Classic Series) (No Labor)
   * Engine Driven Welder/Generators **(NOTE: Engines are Warranted Separately by the Engine Manufacturer.)**
   * Inverter Power Sources (Unless Otherwise Stated)
   * Plasma Arc Cutting Power Sources
   * Process Controllers
   * Semi-Automatic and Automatic Wire Feeders
   * Transformer/Rectifier Power Sources
3. 2 Years — Parts and Labor
   * Auto-Darkening Helmet Lenses – Classic Series Only (No Labor)
   * Fume Extractors – Capture 5, Filtair 400 and Industrial Collector Series
4. 1 Year — Parts and Labor Unless Specified
   * AugmentedArc and LiveArc Welding Systems
   * Automatic Motion Devices
   * Bernard BTB Air-Cooled MIG Guns (No Labor)
   * CoolBelt and CoolBand Blower Unit (No Labor)
   * Desiccant Air Dryer System
   * External Monitoring Equipment and Sensors
   * Field Options **(NOTE: Field options are covered for the remaining warranty period of the product they are installed in, or for a minimum of one year — whichever is greater.)**
   * RFCS Foot Controls (Except RFCS-RJ45)
   * Fume Extractors – Filtair 130, MWX and SWX Series
   * HF Units
   * ICE/XT Plasma Cutting Torches (No Labor)
   * Induction Heating Power Sources, Coolers **(NOTE: Digital Recorders are Warranted Separately by the Manufacturer.)**
   * Load Banks
   * Motor-Driven Guns (except Spoolmate Spoolguns)
   * PAPR Blower Unit (No Labor)
   * Positioners and Controllers
   * Racks
   * Running Gear/Trailers
   * Spot Welders
   * Subarc Wire Drive Assemblies
   * TIG Torches (No Labor)
   * Tregaskiss Guns (No Labor)
   * Water Cooling Systems
   * Wireless Remote Foot/Hand Controls and Receivers
   * Work Stations/Weld Tables (No Labor)
5. 6 Months — Parts
   * Batteries
6. 90 Days — Parts
   * Accessory (Kits)
   * Canvas Covers
   * Induction Heating Coils and Blankets, Cables, and Non-Electronic Controls
   * M-Guns
   * MIG Guns, Subarc (SAW) Torches, and External Cladding Heads
   * Remote Controls and RFCS-RJ45
   * Replacement Parts (No labor)
   * Spoolmate Spoolguns

Miller's True Blue® Limited Warranty shall not apply to:

1. **Consumable components; such as contact tips, cutting nozzles, contactors, brushes, relays, work station table tops and welding curtains, or parts that fail due to normal wear. (Exception: brushes and relays are covered on all engine-driven products.)**
2. Items furnished by Miller, but manufactured by others, such as engines or trade accessories. These items are covered by the manufacturer's warranty, if any.
3. Equipment that has been modified by any party other than Miller, or equipment that has been improperly installed, improperly operated or misused based upon industry standards, or equipment which has not had reasonable and necessary maintenance, or equipment which has been used for operation outside of the specifications for the equipment.

MILLER PRODUCTS ARE INTENDED FOR PURCHASE AND USE BY COMMERCIAL/INDUSTRIAL USERS AND PERSONS TRAINED AND EXPERIENCED IN THE USE AND MAINTENANCE OF WELDING EQUIPMENT.

In the event of a warranty claim covered by this warranty, the exclusive remedies shall be, at Miller's option: (1) repair; or (2) replacement; or, where authorized in writing by Miller in appropriate cases, (3) the reasonable cost of repair or replacement at an authorized Miller service station; or (4) payment of or credit for the purchase price (less reasonable depreciation based upon actual use) upon return of the goods at customer's risk and expense. Miller's option of repair or replacement will be F.O.B., Factory at Appleton, Wisconsin, or F.O.B. at a Miller authorized service facility as determined by Miller. Therefore no compensation or reimbursement for transportation costs of any kind will be allowed.

TO THE EXTENT PERMITTED BY LAW, THE REMEDIES PROVIDED HEREIN ARE THE SOLE AND EXCLUSIVE REMEDIES. IN NO EVENT SHALL MILLER BE LIABLE FOR DIRECT, INDIRECT, SPECIAL, INCIDENTAL OR CONSEQUENTIAL DAMAGES (INCLUDING LOSS OF PROFIT), WHETHER BASED ON CONTRACT, TORT OR ANY OTHER LEGAL THEORY.

ANY EXPRESS WARRANTY NOT PROVIDED HEREIN AND ANY IMPLIED WARRANTY, GUARANTY OR REPRESENTATION AS TO PERFORMANCE, AND ANY REMEDY FOR BREACH OF CONTRACT TORT OR ANY OTHER LEGAL THEORY WHICH, BUT FOR THIS PROVISION, MIGHT ARISE BY IMPLICATION, OPERATION OF LAW, CUSTOM OF TRADE OR COURSE OF DEALING, INCLUDING ANY IMPLIED WARRANTY OF MERCHANTABILITY OR FITNESS FOR PARTICULAR PURPOSE, WITH RESPECT TO ANY AND ALL EQUIPMENT FURNISHED BY MILLER IS EXCLUDED AND DISCLAIMED BY MILLER.

Some states in the U.S.A. do not allow limitations of how long an implied warranty lasts, or the exclusion of incidental, indirect, special or consequential damages, so the above limitation or exclusion may not apply to you. This warranty provides specific legal rights, and other rights may be available, but may vary from state to state.

In Canada, legislation in some provinces provides for certain additional warranties or remedies other than as stated herein, and to the extent that they may not be waived, the limitations and exclusions set out above may not apply. This Limited Warranty provides specific legal rights, and other rights may be available, but may vary from province to province.

# Owner's Record

Please complete and retain with your personal records.

Model Name Serial/Style Number

Purchase Date (Date which equipment was delivered to original customer.)

Distributor

Address

City

State Zip

# For Service

***Contact a DISTRIBUTOR or SERVICE AGENCY near you.***

Always provide Model Name and Serial/Style Number.

| | |
|---|---|
| Contact your Distributor for: | Welding Supplies and Consumables<br>Options and Accessories<br>Personal Safety Equipment<br>Service and Repair<br>Replacement Parts<br>Training (Schools, Videos, Books)<br>Technical Manuals (Servicing Information and Parts)<br>Circuit Diagrams<br>Welding Process Handbooks<br>To locate a Distributor or Service Agency visit www.millerwelds.com or call 1-800-4-A-Miller |
| Contact the Delivering Carrier to: | File a claim for loss or damage during shipment.<br>For assistance in filing or settling claims, contact your distributor and/or equipment manufacturer's Transportation Department. |

**Miller Electric Mfg. Co.**
An Illinois Tool Works Company
1635 West Spencer Street
Appleton, WI 54914 USA

**International Headquarters–USA**
USA Phone: 920-735-4505 Auto-Attended
USA & Canada FAX: 920-735-4134
International FAX: 920-735-4125

For International Locations Visit
www.MillerWelds.com

ORIGINAL INSTRUCTIONS – PRINTED IN USA

© 2017 Miller Electric Mfg. Co. 2017–01