October 1969 FORM: IOM- 114A

Effective with serial No. N295574

| MODEL | STOCK NO. |
|---|---|
| M-180 | 900 001 |
| M-180P | 900 010 |
| M-225 | 900 019 |
| M-225P | 900 028 |

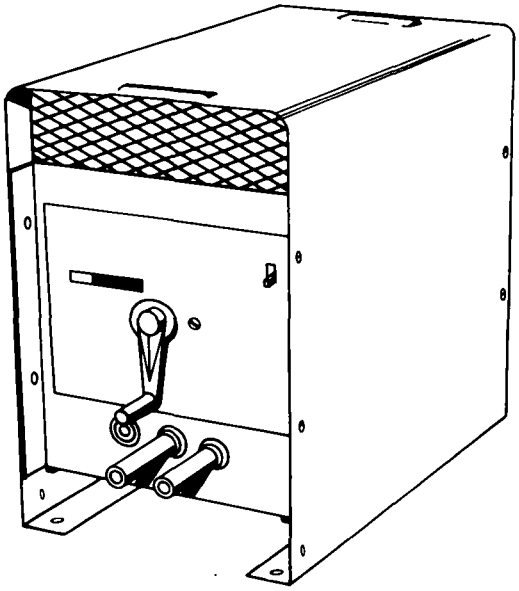

# Installation Operation & Maintenance Manual

miller ELECTRIC MFG. CO.
APPLETON, WISCONSIN, U.S.A. 54911

NWSA CODE NO. 4579

PRINTED IN U.S.A.

# SECTION 1- SAFETY RULES FOR OPERATION OF ARC WELDING MACHINE

### 1.1. GENERAL

□A. These rules apply to ac and dc welding generators, ac transformer and ac/dc welding machines, and dc transformer rectifier welding machines.

□B. In arc-welding operations, where electrically energized parts are exposed, observe the following safety rules to insure maximum personal safety and protect nearby persons.

□C. Failure to observe these safety precautions may expose not only you, but fellow workers as well, to serious injuries. Once these rules are learned and kept in mind, proceed with maximum assurance.

## WELDING MACHINE

### 1.2. WELDING CABLES

DON'T overload cables.

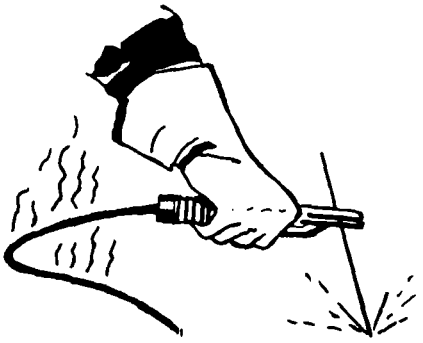

□A. Never use welding cables at currents in excess of their rated capacity. It will cause overheating and rapid deterioration of the insulation. It is also uneconomical.

DON'T use worn or poorly connected cables.

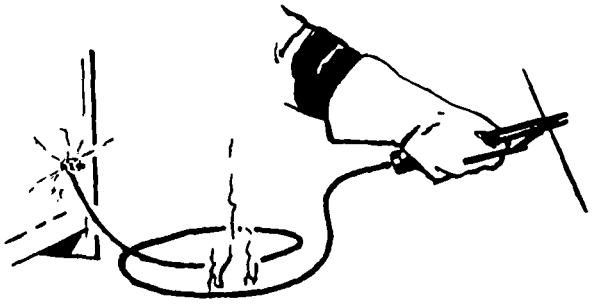

□B. Inspect the cables frequently. Immediately repair all breaks in the insulation with rubber and friction tapes. Tighten all cable connections and adequately insulate any joints where a connector may have an exposed conductive part. In addition to the potential hazard to life, a hazard occurs when exposed sections of cable come in contact with grounded metallic objects, causing an arc. Unprotected eyes may be injured and fire may result if combustible materials such as oil or grease are in the vicinity. The efficiency and quality of welding will be improved by elimination of these dangerous grounds, and by keeping connections tight.

### 1.3. ELECTRODE HOLDER

DON'T use electrode holders with defective jaws.

□A. Keep the jaws of the electrode holder tight and the gripping surfaces in good condition to provide close contact with the electrodes. Defective jaws will permit the electrode to wobble, making control of the welding operations difficult.

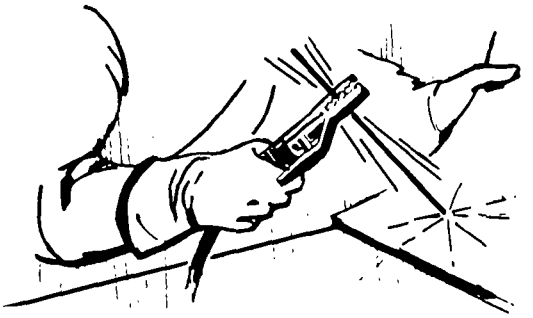

DON'T use electrode holder with loose cable connections.

□B. Keep the connections of the electrode lead to the holder tight at all times.

□C. Use only fully insulated electrode holders (and without protruding screwheads.)

□D. Never touch two electrode holders from two separate welding machines at the same time.

### 1.4. CODE CONFORMANCE

□A. The machine and its equipment must be installed and maintained in accordance with the National Electrical Code and local requirements.

### 1.5. PARALLEL CONNECTIONS

□A. See diagrams in the instruction manual applying to the welding machine used.

### 1.6. POWER DISCONNECT SWITCH

□A. If the welding machine does not include a power disconnect switch, install one at or near the machine.

### 1.7. POLARITY SWITCH

DON'T operate the polarity switch under load.

□A. The polarity switch (when supplied) is provided for changing the electrode lead from positive (reverse polarity) to negative (straight polarity). Never move it while under the load of a welding current. Operate this switch only while the machine is idling and the welding circuit is open. The potential dangers of opening the circuit while carrying high current are:

□(1) An arc will form between the contact surfaces of the switch and severely burn them.

□(2) The person throwing the switch may receive a severe burn from this arcing.

### 1.8. RANGE SWITCH

DON'T operate the range switch under load.

□A. The range switch (when supplied) is provided for obtaining required current settings. It must never be operated while the machine is under the load of welding current. Operate the range switch only while the machine is idling and the welding circuit is open. The potenial danger of switching the circuit while carrying high current is the formation of an arc between the contact surface which will severely burn them. Repeated occurrences of this arcing will eventually prevent operation of the contacts.

### 1.9. EXHAUST GASES

DON'T use gas engine units in confined spaces without venting the exhaust gases.

□A. If gasoline or other fuel driven welding machines are operated indoors, provide means to pipe the exhaust gases to the outside air to avoid carbon monoxide poisoning.

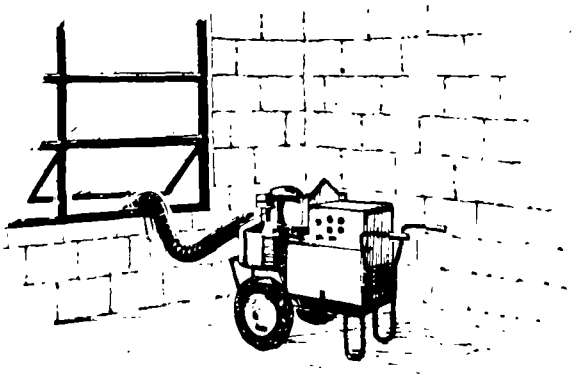

### 1.10. POWER CIRCUIT GROUND

DON'T use welding machine without grounding frame or case.

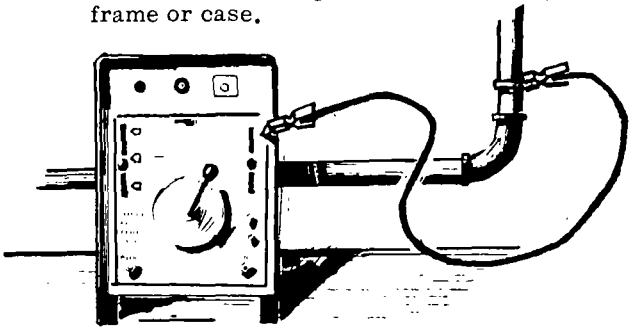

☐A. Ground the ground cable of every power circuit to prevent accidental shock by stray current. The potential danger is that development of a stray current may give a fatal shock should a person, for example, place one hand on the welding machine and the other on the switch box, or other grounded equipment. Do not ground to pipelines carrying gases or flammable liquids and conduits carrying electrical conductors. Be sure conductors can safely carry the ground current. When connecting the welding machine, properly ground the machine frame or case.

## WELDING OPERATIONS

### 1.11. CONTAINERS WHICH HELD COMBUSTIBLES

DON'T weld on containers which have held combustible or flammable materials or materials which, when heated, give off flammable or toxic vapors without proper cleaning, purging, or inerting.

☐A. Welding on containers which have held flammable or combustible materials may be extremely dangerous. To prevent a fire or explosion of the container, follow the recommendations of the American Welding Society Pamphlet A6.0 "Welding or Cutting Containers Which Have Held Combustibles".

DON'T depend on your eyes or nose to decide if it is safe to weld on a closed container.

☐B. Find out what was in the container or use an explosimeter. A very small amount of residual flammable gas or liquid can cause a serious explosion.

NEVER use oxygen to ventilate a container.

☐C. When you know the container held a gas or liquid which will readily dissolve in water:

- ☐(1) Flush out with water several times and then fill with water as far as work permits, positioning container to permit introduction of as much water as possible.
- ☐(2) Before welding be sure there is a vent or opening to provide for release of air pressure.

☐D. When you know the container held a gas or liquid which will not readily dissolve in water.

- ☐(1) Clean out thoroughly with steam or a cleansing agent and purge all air or inert with a gas such as carbon dioxide or nitrogen before repairing. Carbon dioxide is heavier than air and will tend to remain in the container if the opening is at the top.
- ☐(2) Use steam to clean out light material.
- ☐(3) Use a strong caustic soda solution to clean out heavy oils or grease.
- ☐(4) Be sure to purge all air or inert with a gas, such as nitrogen or carbon dioxide, no matter how well you have cleaned. There may still be traces of oil, grease, or other readily oxidizable material under the seams.

☐E. Be careful when cleaning with steam or caustic soda wear goggles and gloves.

DON'T clean where there is poor ventilation.

☐F. Ventilation is necessary to carry away harmful or explosive vapors.

DON'T clean where there are open flames.

☐G. When scraping or hammering to remove heavy sludge or scale, use a spark resistive tool and keep it wet to avoid sparks.

☐H. Keep your head and arms as far away from your work as possible.

### 1.12. HOLLOW CASTINGS

DON'T weld on hollow (cored) castings that have not been properly vented. The casting may explode.

### 1.13. EXPLOSION HAZARDS

NEVER weld in or near explosive atmospheres. Such atmospheres can be created by flammable gas leaks or by vapors from flammable liquids (gasoline, alcohol, etc.) or by combustible dusts.

### 1.14. VENTILATION

DON'T weld in confined spaces without adequate ventilation.

☐A. When welding in confined spaces, provide ventilation in accordance with United States of America Standard Z49.1, 1967. Always provide adequate ventilation by blowers, air lines, or other acceptable means. Never use compressed oxygen. The depletion of the oxygen supply, the heat of welding, and the fumes given off may cause severe discomfort or a serious illness.

☐B. When toxic fumes from lead or cadmium bearing materials or any other substances are present in harmful concentrations, always use an air supplied respirator.

### 1.15. SOLVENTS

☐A. Do not weld where chlorinated hydrocarbon vapors from degreasing, cleaning, or spraying may reach or be drawn into air surrounding the welding operation. The heat of the arc can decompose solvent vapors to form phosgene, a highly toxic gas and other irritating decomposition products.

☐B. Do not weld where ultraviolet light from the electric arc can penetrate air containing even minute amounts of vapors from solvents such as trichloroethylene or perchloroethylene. Ultraviolet light can decompose the vapors to form phosgene, a highly toxic gas, and other irritating products.

### 1.16. FIRE HAZARDS

DON'T weld near flammable or combustible materials.

☐A. Fires can be caused by the arc, by contact with the heated metal, by slag, or sparks. Keep combustibles at least 35 feet from the arc or suitably protected. If welding must be done in a particular area, move the combustibles away. If they cannot be moved, cover them completely with fire resistive screens. Cover cracks or openings in floors or walls; sweep floor free of combustibles and wet down, if wood, being sure welder wears insulation shoe coverings. Avoid welding on partition walls in contact with combustibles. Heated metal on the other side of partition wall being welded upon can ignite combustibles in contact with the partition. Where other than a minor fire might develop, have a fire watcher stand by with suitable fire extinguishing equipment for at least one-half hour after the welding is completed.

### 1.17. ELECTRICAL SHOCK-VOLTAGE

OPEN power circuits before checking machines.

☐A. Before working on the wiring, switches, controls, etc., open the power line disconnect switch. In most welding shops the power supply used for arc welding machines is 230 or 460 volts. Open circuit voltages are usually less than 100 volts and welding or arc voltage drops are still lower. However, all of these voltages are capable of developing a harmful or fatal current to the body.

DON'T touch electrically "hot" parts.

☐B. Never touch any exposed or non-insulated part of the cables, cable connectors, clamps, electrode holders, electrodes, or the power supply equipment to prevent harmful or fatal electric shock or burns.

### 1.18. ELECTRICAL SHOCK-DAMPNESS

NEVER work in a damp area without suitable insulation against shock. Keep hands, feet, and clothing dry at all times.

☐A. To prevent harmful body shocks, keep hands, feet and clothing dry. Never stand or lie in puddles of water, damp ground, or against grounded metal when welding without suitable insulation against shock. Always find a dry board or rubber mat to stand on when water, moisture, or perspiration cannot be avoided. Dampness between the body and an energized or grounded metallic part lowers the resistance to the passage of current to the body which may produce a harmful or fatal shock. Salt in perspiration or sea water dangerously lowers contact resistances.

### 1.19. STARTING UNDER LOAD

DON'T leave an uninsulated electrode holder, or a "live" electrode on the table top or in contact with a grounded metallic surface.

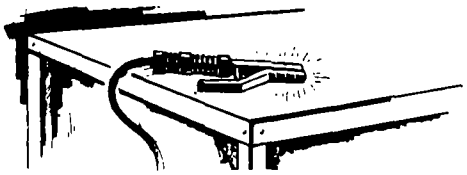

When it is not in use, never place an electrode holder in contact with the table top or other metallic surface in contact with welding ground. Provide an insulated hook or holder for the electrode holder. A potential danger is that a holder in contact with the ground circuit provides a dead short circuit on the welding machine. If the machine should be started up, this short circuit would cause an excessive load on the machine and may damage the insulation.

### 1.20. FACE PROTECTION

DON'T use cracked or defective helmets or shields.

Keep the helmet, hand shields, or face shield in good condition. If cracks occur in the fibre material, replace the shield, since the leakage of arc rays may cause serious burns.

### 1.21. EYE PROTECTION

NEVER under any circumstances, look at an electric arc without eye protection.

**CAUTION**

Make sure that flash goggles are used under the welding helmet at all times, particularly while gas shielded-arc welding.

☐A. In some type of arc welding, such as gas shielded-arc welding, ultra-violet and infrared radiation from the arc is particularly intense and requires constant attention to avoid arc flashes to the welder when striking an arc and to avoid exposure to other welders.

NEVER strike an arc without ascertaining that nearby persons either have the necessary protective equipment or are looking in the opposite direction.

☐B. For welding operations in open areas, provide portable, non-reflecting screens to shield persons nearby from the rays of the arc. Eye burns from the arc, though not generally permanent injuries, are exceedingly painful. Such burns frequently referred to as "flashes", feel like hot sand in the eye. For eye burns consult your first aid station or doctor.

NEVER use cracked, ill-fitting, or defective plates.

☐C. The filter glass plate provided in the helmets and shields must be of reputable manufacture conforming to the latest USA Standard Z2.1. Replace cracked or ill-fitting filter plates promptly.

NEVER use filter plates without a protecting cover glass.

☐D. Keep a clean cover glass in front of the filter plate for the protection thereof. Frequent renewal of these cover glasses is necessary, since they become covered with spatter, reducing vision.

### 1.22. CLOTHING

NEVER use poor, inadequate, or worn-out clothing. Wear heavy shoes, tightly laced. Keep clothing dry.

☐A. Proper and dry, oil-free clothing is essential for the welder's protection. Clothing must not only keep off the spatter and molten particles, but must also abstruct the rays of the arc and, when necessary, insulate the body from harmful electrical currents.

☐B. Wear leather or asbestos gloves at all times to protect the hands and wrists. Dark colored shirts are preferred to light ones because light ones reflect arc rays to exposed parts of the body. In the case of gas shielded-arc welding, light colors are more reflective and may cause eye burns due to the intense ultra-violet rays given off by the process. Avoid cotton fabrics when gas shielded-arc welding.

☐C. An arc burn on the skin resembles a sunburn, except that it is usually more severe. Clothing can be made flame resistant by treatment with a solution of 3/4 pound of sodium stannate in 1 gallon of water, then wrung out and dipped in a solution of 1/4 pound ammonium sulphate per gallon of water. Don't wash clothing so prepared in water, but dry clean.

☐D. When welding operations are to be performed in vertical and overhead positions, leather sleevelets, aprons, and in some cases leggings and ear plugs should be used to prevent severe burns from spatter and molten metal.

### 1.23. HOT METAL BURNS

NEVER pick up hot objects.

☐A. Never pick up pieces of metal which have just been welded or heated, or the stub ends of electrodes which have been discarded.

### 1.24. GRINDING AND CHIPPING

☐A. Whenever it is necessary to grind or chip metal, wear protective goggles specifically designed for this purpose. Serious eye injuries may result from failure to wear protective goggles.

NEVER do any chipping or grinding without protective goggles.

### 1.25. COMPRESSED GAS CYLINDERS

NEVER strike an arc on compressed gas cylinders.

☐A. Avoid accidental contact of the electrodes, electrode holder, or other electrically energized parts with a compressed gas cylinder or any other pressure vessel. Serious accidents or fires may result.

☐B. Use I.C.C. cylinders. They are manufactured and maintained in accordance with I.C.C. requirements and are safe so long as they are properly handled. Don't drop cylinders.

☐C. Identify gas content by the name marked on the cylinder. If the cylinder is unmarked, do not use it. Return it to the supplier. Do not rely on color code.

☐D. Never use a cylinder or its contents for other than intended purposes.

☐E. Keep oil and grease away from oxygen cylinders and cylinder valves.

☐F. Keep cylinders away from exposure to sparks, hot slag, open flame and all possible sources of ignition or excessive heat.

☐G. Be careful that cylinders are not placed so as to become a part of an electrical circuit. Avoid third rails, wires and electric welding circuits.

☐H. When transporting cylinders by crane, use cradle, platform or other suitable support.

☐I. Never lift the cylinders by slings, by the caps or by electric magnets.

☐J. Never use cylinders as supports or rollers.

☐K. Never try to mix any gases in a cylinder.

☐L. Never try to refill a cylinder.

☐M. Mark empty cylinders "Empty" or "MT".

☐N. Send "Emptys" back to the supplier promptly.

☐O. Keep "Emptys" and "Fulls" separate.

☐P. Never tamper with or alter cylinder numbers or other markings. This is not only foolish but may be illegal.

☐Q. Do not tamper with or change fittings on cylinders.

☐R. If valves cannot be opened by hand, do not use hammer or wrench. Notify supplier.

☐S. Protect cylinder valves from bumps, falls, falling objects, and from weather. Keep them covered with cylinder caps when moving cylinders.

☐T. Keep valves closed on empty cylinders.

☐U. See that your cylinders are clear of passageways and active work areas and that they are secured against falling.

☐V. If adapter is required between cylinder and regulator, always use a standard adapter. These may be obtained from your supplier. Where right and left hand threads are used on adapter, use two wrenches to insure leak proof connections.

☐W. Do not store cylinders in unventilated areas.

# SECTION 2 - INTRODUCTION

## 2-1. GENERAL

This manual has been prepared especially for use in familiarizing personnel with the design, installation, operation and maintenance of the welding machine. In some cases, the contents of this publication are generalized. All information presented in this manual should be given careful consideration to assure optimum performance and service of the equipment.

Process information is available by contacting your welding distributor.

## 2-2. RECEIVING-HANDLING

To prepare the welding machine for installation, several items should be checked. Clean all packing material from around the unit and carefully inspect for damage that may have been caused by shipping. Any claims for loss or damage that may have occurred in transit must be filed by the buyer with the carrier. Copy of bill of lading and freight bill will be furnished on request if occasion to file claim arises.

Be sure to read all the instructions before attempting to operate the welding machine.

When requesting information concerning the welding machine, be sure, to furnish serial and model numbers.

## 2-3. DESCRIPTION

This welding machine is designed for use in light industrial plants, metal fabrication shops, automotive repair shops and for general light welding applications.

Two welding current ranges are available. The high range provides ample normal open circuit voltage for average electrode sizes. The low range provides maximum open circuit to permit the use of smaller electrode sizes.

The 180 amp machine uses natural updraft cooling and the 225 amp machine uses a fan, both which help ensure that the internal components are kept below the critical operating temperatures, providing the duty cycle ratings are not exceeded.

## 2-4. SAFETY

Before attempting to make primary or secondary connections, change parts or make repairs, be sure the welding machine is completely disconnected from the main power line.

Before the welding machine is put into operation, read the complete safety section at the front of this manual. This will help avoid any possible injury due to misuse or improper welding applications.

| MODEL | WELDING CURRENT RANGE–AMPERES | RATED CURRENT OUTPUT AT 25 VOLTS, 20% DUTY CYCLE | CURRENT OUTPUT AT 30 VOLTS, 20% DUTY CYCLE | OPEN CIRCUIT VOLTS | POWER INPUT AT RATED LOAD 50/60 Hz. AMPERES 230 VOLTS SINGLE PHASE | kw | kva | DIMENSIONS OVERALL HEIGHT | WIDTH | DEPTH | WEIGHT NET | SHIPPING |
|---|---|---|---|---|---|---|---|---|---|---|---|---|
| 180 Amp. | 20-180 | 180 | | 55/80 | 37 | 5.4 | 8.5 | 17" | 12-1/2" | 20-1/2" | 130 Lbs. | 138 Lbs. |
| 180 Amp. * | 20-180 | 180 | | 55/80 | 30 | 5.4 | 6.9 | 17" | 12-1/2" | 20-1/2" | 135 Lbs. | 142 Lbs. |
| 225 Amp. | 30-225 | 225 | 200 | 55/80 | 44.4 | 7.2 | 10.2 | 17" | 12-1/2" | 20-1/2" | 135 Lbs. | 142 Lbs. |
| 225 Amp. * | 30-225 | 225 | 200 | 55/80 | 38.5 | 7.2 | 8.8 | 17" | 12-1/2" | 20-1/2" | 140 Lbs. | 147 Lbs. |

*With Power Factor Correction.

Figure 2-1. Specifications

# SECTION 3 - INSTALLATION

## 3-1. LOCATION (Figure 3-1)

Proper component operating temperatures on the 225 amp model are maintained by the air stream produced by the fan assembly. On the 180 amp model air cooling is provided by means of natural updraft through the vented bottom. Therefore the air passages in the front and bottom of the welding machine must be kept open. The rear of the welding machine should be kept a minimum distance of 18 inches from the wall to help ensure proper cooling.

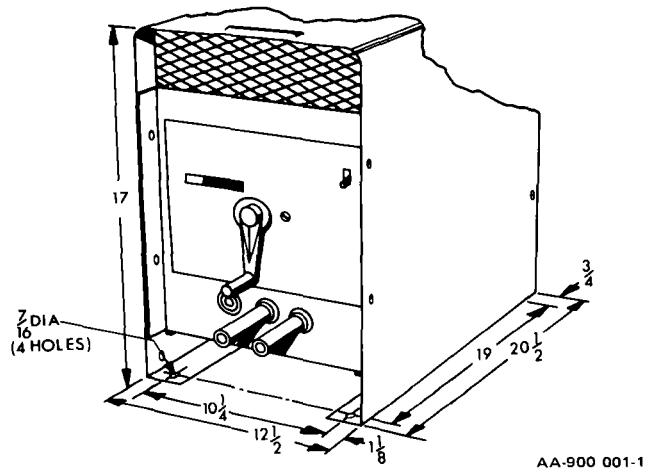


Figure 3-1. Dimensional Drawing

The location should be such that a minimum amount of dust and dirt will be drawn into the air stream. Preventive maintenance consists of removing the wrapper and blowing out the dust accumulation inside the welding machine. For this reason it is desirable to locate the unit so that the wrapper can be removed without any difficulty.

Four mounting holes are provided in the welding machine base for machines that require mounting. Figure 3-1 gives overall dimensions and the base mounting hole layout for console installation or other installations that may require this information.

## 3-2. PRIMARY CONNECTIONS (Figure 3-2 & 3-3)

Most rural and residental power systems are of the 115/230 volt, single phase type.

This ac arc welding machine is a single phase unit and must be connected to a single phase power line.

Consult the local power and light company if there is any question about type of system used locally or the proper connection to obtain single phase power service to the welding machine.

All models are ordinarily supplied with an attached three conductor cable. Models requiring 208 or 230 volt primary input are equipped with a three prong polarized plug and wall receptacle.

The wall receptacle should be installed in a convenient location by a competent electrician. The wall receptacle should be installed with the grounding

terminal at the top as this then permits the power cord to hang downward without undue bending or twisting.

Models with other than 230 volt only primary input voltages, are equipped with a voltage changeover terminal strip and two jumper links. This terminal strip is accessible by opening the access door on the rear panel. The terminal strip is located at the rear of the welding machine base.

If the welding machine is furnished with a primary voltage changeover terminal strip, connect the jumper links to the indicated voltage terminals to match the primary input voltage. Whenever only one jumper link connection is necessary for the proper input voltage, connect both jumper links across the same two terminals. This will help prevent losing the second jumper link. Refer to Figure 3-2 for proper jumper link connections. Welding machines are shipped, unless otherwise ordered, with the jumper links connected in the highest voltage position.

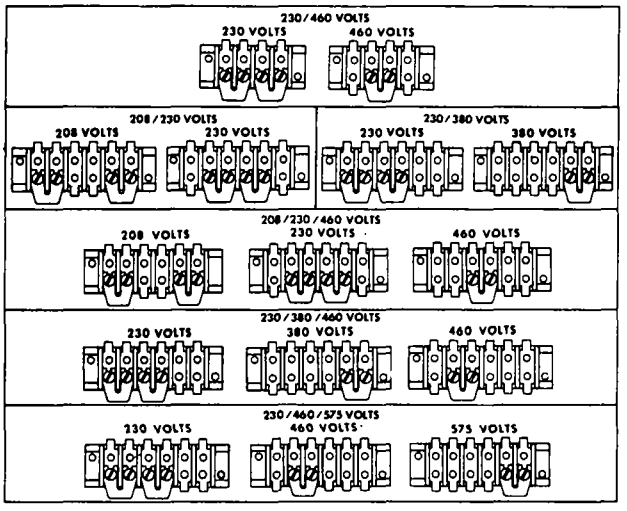


A-900 923-5

**Figure 3-2. Primary Voltage Link Arrangement**

This welding machine should be operated from a separately fused or circuit breaker protected circuit. The maximum capacity of the welding machine is affected by the line voltage and if the circuit is overloaded, the performance of the welding machine will be impaired.

Install a cable of two primary wires plus one ground wire (see Table 3-1 for proper wire and fuse sizes) from the line disconnect switch or circuit breaker to the WALL RECEPTACLE. See Figure 3-3.

For models without a three prong plug, a 60 ampere plug may be installed to the welding machine primary input cable and the receptacle to the line disconnect switch.

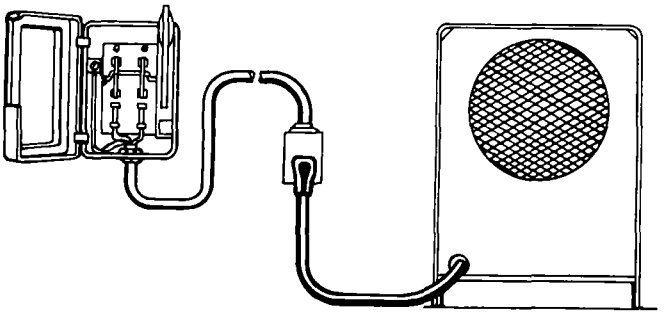

AA-900 923-9

**Figure 3-3. Primary Connections**

A grounding wire must be run to a suitable grounding medium such as the electrical conduit system, the water system or a regular driven ground rod. Check with the local inspection authority if there is any question as to an accepted grounding method.

Models with a three prong polarized plug, plug into the wall receptacle. For models without a three prong plug, connect the No. 10 green wire to the ground wire or connection in the line disconnect switch and the two No. 8 wires to the power leads.

## 3-3. SECONDARY (WELDING) CONNECTIONS

It is recommended that the welding cables be kept as short as possible, placed close together and be of adequate current carrying capacity. The resistance of the welding cables and connections cause a voltage drop which is added to the voltage of the arc. Excessive cable resistance may result in overloading as well as reducing the maximum current output of which the welding machine is capable.

When welding with ac, longer cables if coiled up, will generate a magnetic field that can reduce the output of the welding machine. The welding cables from the work and electrode holder to the welding machine should be taped together at short intervals.

The proper operation of any arc welding machine is to a great extent dependent on the use of welding cables and connections that are in good condition

**Table 3-2. Secondary Welding Cable Size**

| WELDING AMPERES | *TOTAL LENGTH OF CABLE (COPPER) IN WELD CIRCUIT | | | | | |
|---|---|---|---|---|---|---|
| | *50 | 100 | 150 | 200 | 250 | 300 |
| 100 | 2 | 2 | 1 | 1/0 | 2/0 | 3/0 |
| 150 | 2 | 1 | 2/0 | 3/0 | 4/0 | |
| 200 | 2 | 1/0 | 3/0 | 4/0 | | |
| 250 | 2 | 2/0 | 4/0 | | | |
| 300 | 1 | 3/0 | | | | |

NOTE: *A. 50 FEET OR LESS
*B. CABLE SIZE IS BASED ON DIRECT CURRENT (DC), 20% DUTY CYCLE AND EITHER A 4 VOLTS OR LESS DROP OR A CURRENT DENSITY OF NOT OVER 300 CIRCULAR MILS PER AMP.
*C. WELD CABLE INSULATION WITH A VOLTAGE RATING TO WITHSTAND THE OPEN CIRCUIT VOLTAGE (O.C.V.) OF THE WELDING MACHINE MUST BE USED. WHILE MOST WELDING MACHINES HAVE AN OPEN CIRCUIT VOLTAGE OF LESS THAN 100 VOLTS, SOME WELDING MACHINES OF SPECIAL DESIGN MAY HAVE HIGHER OPEN CIRCUIT VOLTAGE.

**Table 3-1. Recommended Primary Wire And Fuse Sizes**

| MODEL | PRIMARY WIRE SIZE (From source to line disconnect switch) | | | | | FUSE SIZE (AMPERES) | | | | |
|---|---|---|---|---|---|---|---|---|---|---|
| | 115 V | 208 V | 230 V | 460 V | 575 V | 115 V | 208 V | 230 V | 460 V | 575 V |
| 180 Amp Model Without P.F.C.* | No. 2 (No. 6) | No. 6 (No. 8) | No. 8 (No. 8) | No. 12 (No. 12) | No. 14 (No. 14) | 150 | 80 | 70 | 35 | 30 |
| 180 Amp Model With P.F.C.* | No. 4 (No. 6) | No. 8 (No. 8) | No. 10 (No. 10) | No. 14 (No. 14) | No. 14 (No. 14) | 110 | 70 | 60 | 30 | 25 |
| 225 Amp Model Without P.F.C.* | No. 2 (No. 6) | No. 6 (No. 8) | No. 6 (No. 8) | No. 10 (No. 10) | No. 12 (No. 12) | 175 | 100 | 90 | 45 | 35 |
| 225 Amp Model With P.F.C.* | No. 3 (No. 6) | No. 6 (No. 8) | No. 8 (No. 8) | No. 12 (No. 12) | No. 12 (No. 14) | 150 | 80 | 75 | 35 | 30 |

Numbers in ( ) are ground wire sizes.
*Power Factor Correction.

and of adequate size. Electrode holder and ground clamp should be at least 200 ampere capacity and securely connected to the welding cables. An insulated electrode holder must be used to ensure operator's safety. Select the proper size welding cable from Table 3-2.

A. **Jack Plug Installation (Figure 3-4)**

Two jack plugs, enclosed in a cloth bag, are furnished with the welding machine. Follow instructions carefully for proper installation of the jack plugs to the welding cables. See Table 3-2 for proper welding cable size. Standard jack plugs furnished with unit will accommodate cable sizes ranging from 6 to 1.

1. Remove 3/4 inch of insulation from one end of each welding cable.
2. Clamp the welding cable in a vise with the uninsulated end protruding upward out of the vise approximately 1-3/4 inches.
3. Place the steel tie wire (A) approximately 1/4 inch from the end of the insulation.
4. Make a half turn around the cable bringing the looped ends of the tie wire together.
5. Insert a rod of approximately 3/8 inch diameter through the two looped ends of the tie wire.
6. Twist the tie wire (B) until the entire tie wire is twisted and is tight around the insulation of the welding cable.
7. Clip off the looped ends of the tie wire.
8. Bend the twisted tie wire over along the side (C) of the uninsulated portion of the welding cable.
9. Wrap the strip of copper foil tightly around the uninsulated end of the welding cable and the twisted tie wire (D).
10. Place the jack plug on the end of the welding cable and push it onto the welding cable over the copper foil (E).
11. Insert the 1/4-20 allen set screws into the center and upper holes in the jack plug and tighten.
12. Remove the welding cable from the vise and insert the jack plug into the fiber sleeve. Slide the fiber sleeve over the jack plug and welding cable until the hole in the fiber sleeve lines up with the 8/32 hole in the jack plug (F).
13. Insert the 8/32 self tapping screw through the hole in the fiber sleeve into the jack plug. Tighten the screw with a screw driver.

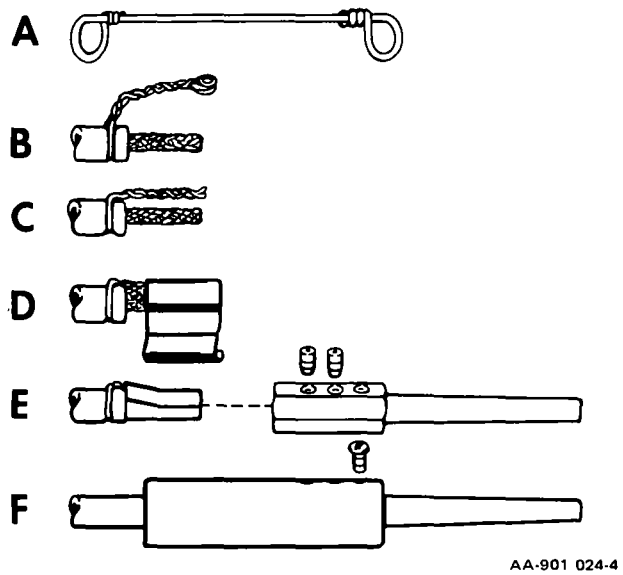

Figure 3-4. Jack Plug Installation

Connect a Work Clamp to one of the unused ends of one of the cables. Connect an Electrode Holder to the unused end of the other welding cable. The method of connecting the cables to the work clamp and electrode holder will depend on the manufacturer's design.

## SECTION 4 - OPERATION

**CAUTION**

Never, under any circumstances, operate the welding machine with the cover removed. In addition to a safety hazard, improper cooling may result in damage to the welding transformer and the welding machine components. Be sure to read the complete safety section at the front of the manual before operating the welding machine.

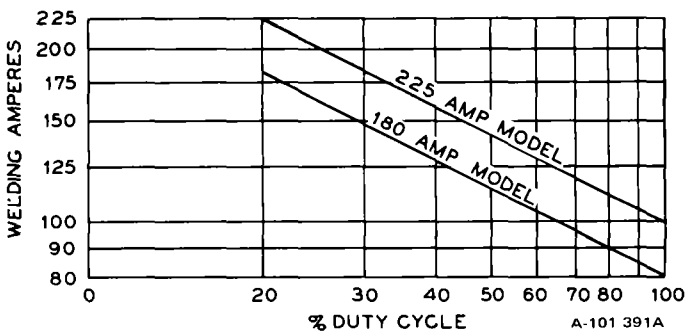

Figure 4-1. Duty Cycle Chart

### 4-1. DUTY CYCLE (Figure 4-1)

The duty cycle of a welding machine is the percentage of a ten minute period that the welding machine can operate safely at a given output.

This welding machine is rated at a 20 percent duty cycle. This means that the welding machine can operate safely at rated load if the machine is on for no more than two minutes and off for eight minutes.

If the output is increased above rated load, the duty cycle must be reduced. Figure 4-1 shows the percent duty cycle compared to output. This chart should be used for reference by the operator to determine the operating limits or ON time of the welding machine if it is operated above rated output.

### 4-2. OPEN CIRCUIT VOLTAGE

This welding machine provides 80 volts open circuit on the ac LOW range and 55 volts open circuit on the ac HIGH current range. Open circuit voltage is the voltage present between the electrode and work before an arc has been struck.

### 4-3. ARC VOLTAGE

Arc voltage is the voltage between the electrode and work while a welding arc is being maintained.

Two open circuit voltages permit the use of larger electrodes demanding high welding amperages with minimum power requirements. The higher open circuit voltage enables the welder to use small diameter electrodes, stainless steel, low hydrogen and other hard to run electrodes with complete satisfaction.

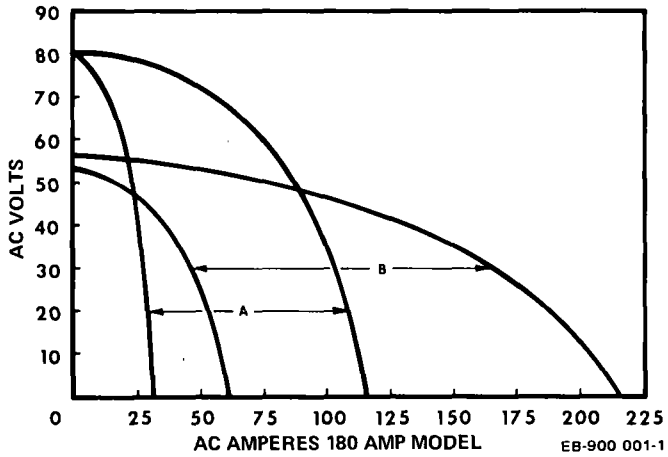


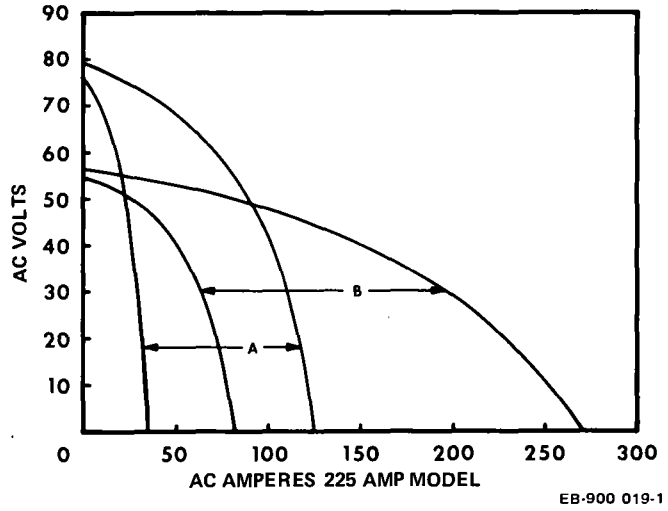


Figure 4-2. Volt-Ampere Curves

This welding machine will handle all good quality mild steel, ac and ac/dc electrodes from 5/64" to 3/16" diameter with the exception of low hydrogen and iron powder coated electrodes. Iron powder coating requires higher arc voltages for the given current. The use of iron powder coated electrodes in the excess of 5/32" diameter is not recommended for this model welding machine.

The high open circuit voltage of 80 volts available on the low ac current range of this welding machine makes it possible to use some of the so-called hard to run electrodes such as stainless steel and low hydrogen up to 3/32" and possibly 1/8" diameter.

## 4-4. VOLT-AMPERE CURVES (Figure 4-2)

The volt-ampere curves show the output voltage available at any given output current within the limits of the minimum and maximum current control setting on each range. With the use of the volt-ampere curves, it is possible to determine the amperage required for a particular load voltage. In metallic arc or coated electrode welding, it is impossible for the operator to hold an arc length which does not vary. This varying arc length causes arc voltage to vary which in turn produces coresponding changes in welding current. The steeper the slope of the volt-ampere curve within the welding range, the lower the current change for a given voltage change.

## 4-5. CURRENT RANGES

The HIGH ampere range utilizes a low open circuit voltage to reduce power demand.

The LOW ampere range utilizes a high open circuit voltage to assure arc flexibility and it is always recommended that the LOW range be used for hard surfacing, alloy application, and small electrodes where the average current used is 155 or less.

## 4-6. FINE CURRENT CONTROL

Select the desired welding current within the range by rotating the Fine Current Adjustment Control on the front of the welding machine. A current indicator on the upper left part of the control panel shows the current in accordance with the current range in use.

## 4-7. ON-OFF POWER SWITCH

The Power switch controls the primary line power to the welding transformer. When the switch is placed in the ON position, open circuit voltage will be impressed across the Work and Electrode receptacles.

## 4-8. SHIELDED METAL-ARC (SMAW) WELDING (Figure 4-3)

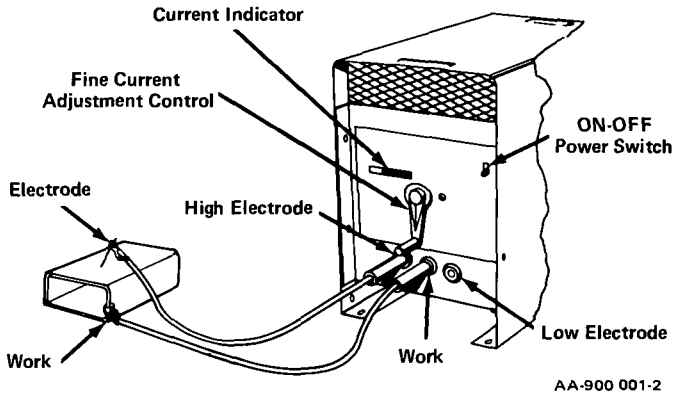


Figure 4-3. AC Welding Connections

1. Insert the jack plug from the Work Welding Cable into the WORK receptacle and clamp the opposite end of the Work Cable to the workpiece.
2. Insert the Electrode Holder welding cable jack plug into either the Electrode LOW or HIGH receptacle. A slight twist while inserting the jack plugs into the receptacles will ensure a tight connection. If the required current is in both ranges, use the LOW range receptacle as this will provide better current control.
3. Turn the Fine Current Adjustment Control to the desired welding current.
4. Place the Power switch in the ON position.
5. Place an electrode of proper type and size into the Electrode Holder and commence welding.
6. Readjust the current control if necessary.
7. After the welding job is completed, break the arc and place the Power switch in the OFF position.

## 4-9. ARC TORCH OPERATION

A carbon arc torch may be used with this welding machine. With a carbon arc torch it is possible to weld and braze metals that ordinarily are considered weldable only by the oxyacetylene method. It is especially adaptable for brazing, soldering, preheating and hard surfacing. A carbon arc torch maintains a high temperature arc between two carbons. Welds produced with this type of torch are sound, strong, and free from porosity. The parent metal or welding rod is used as a filler.

## SECTION 5 - MAINTENANCE

**CAUTION**

Be sure the branch circuit, main disconnect switch or circuit fuses are removed before attempting any inspection or work on the inside of the welding machine. Placing the Power switch on the welding machine in the OFF position, does not remove voltage from the power terminal inside of the machine.

### 5-1. TRANSFORMER

Occasional blowing out the dust and dirt from around the transformer is recommended. This should be done periodically depending upon the location of the Unit and the amount of dust and dirt in the atmosphere. A clean dry air stream should be used for this cleaning operation.

### 5-2. FAN MOTOR (225 Amp Models Only)

The fan motor bearings are of OIL LITE construction. Apply a few drops of light machine oil to the two oil cups on the fan motor once a year.

Be sure not to over oil. Excess oil may get on the power transformer windings and may damage the insulation of the transformer winding.

### 5-3. MOVABLE SHUNT

Approximately once a year, it may be necessary to lubricate the lead screw, guides and shunt slide. Apply a light coat of fairly high temperature grease, taking care to avoid getting grease on any other part of the welding machine. Use SOCONY BRB high temperature grease or equipvalent.

## SECTION 6 - TROUBLESHOOTING

| | |
|---|---|
| A. TROUBLE:<br>No Output or welding current.<br><br>PROBABLE CAUSE:<br>1. Blown line fuses. Bad or open POWER switch. | C. TROUBLE:<br>High Output<br><br>PROBABLE CAUSE:<br>1. Check line voltage.<br>2. Check position of JUMPER links on PRIMARY input terminal board if so equipped. |
| B. TROUBLE:<br>Erratic welding current.<br><br>PROBABLE CAUSE:<br>1. Loose connection on POWER switch, JACK receptacles or POWER cord.<br>2. Bad or damp electrodes. | D. TROUBLE:<br>Low Output.<br><br>PROBABLE CAUSE:<br>1. Check line voltage.<br>2. Check position of JUMPER links on PRIMARY input terminal board if so equipped. |

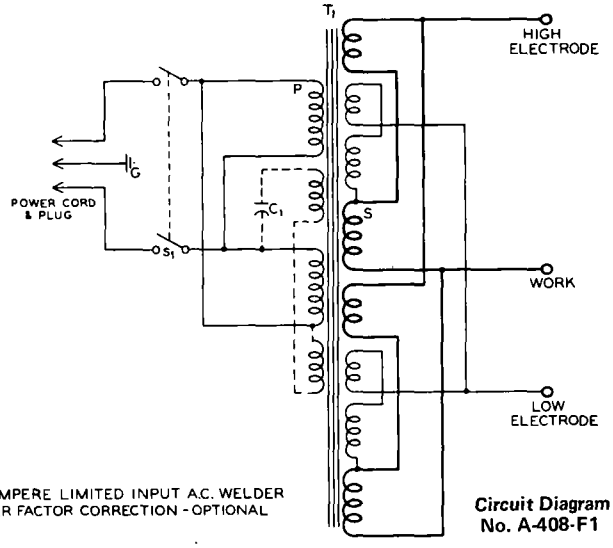


180 AMPERE LIMITED INPUT A.C. WELDER POWER FACTOR CORRECTION - OPTIONAL

**Circuit Diagram No. A-408-F1**

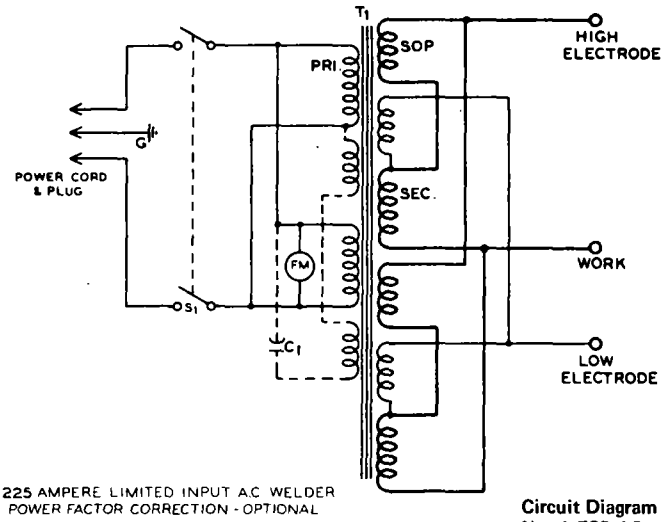


225 AMPERE LIMITED INPUT A.C. WELDER POWER FACTOR CORRECTION - OPTIONAL

**Circuit Diagram No. A-522-A2**

## SECTION 7 - OPTIONAL EQUIPMENT

### NO. 8-A RUNNING GEAR

Has four 5" solid rubber tire wheels which bolt to the frame of the welding machine. Towing handle bolts to the recessed front panel and conveniently folds into the recessed portion of the front panel when not in use.

### NO. 21C2 RUNNING GEAR

Four 2-1/2" ball bearing steel wheel swivel casters which bolt to the frame of the welding machine. No towing handle supplied with this running gear.

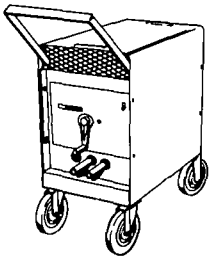

AA-040 031-1

**Figure 7-1. 8-A Running Gear**

# PRINCIPLES OF ARC WELDING

Metal arc welding with the transformer welding machine depends upon the fundamental fact that when one side of the welding circuit is attached to a piece of steel, a welding electrode connected to the other side and the two brought into contact, an arc will be established. If the arc is properly controlled, the metal from the electrode will pass through the arc and be deposited on the steel. When the electrode is moved along the steel at the correct speed, the metal will deposit in a uniform layer called a bead. The electrodes used in welding are carefully manufactured to produce strong, sound welds. They consist of a core of steel wire, usually called mild since it contains a low (0.10 - 0.14) percentage of carbon. Around this core is applied a special coating which assists in creating the arc and at the same time protects the molten steel as it transfers across the arc.

In order to utilize these principles in metal arc welding, some means of controlling the power is essential. The power in a welding circuit is measured by the voltage and current. However, the voltage is governed by the arc length and in turn depends on the electrode diameter. Therefore, the practical measure of the power, or heat, is in terms of the current, generally measured in amperes. Obviously a small electrode requires less current than a large one. To simplify operations the scale on the front of the welding machine is marked off for the various current values.

The exact current selected for a job depends upon the size of the pieces to be welded and the position of welding. Generally a lower current will be sufficient for welding on a small part than would be necessary to weld on a large piece of the same thickness. Similarly with a given size of electrode a lower current should be used on thin metals than on the heavier sections.

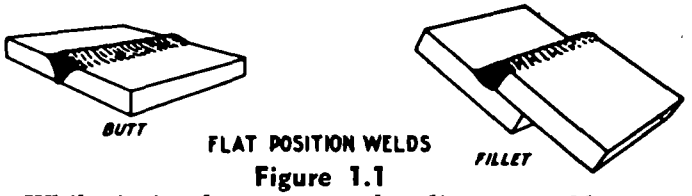


**Figure 1.1**

While it is always a good policy to weld on work in the flat position, as shown in Figure 1.1, occasionally, when working on machines or other large units it will be necessary to weld in a vertical, horizontal or overhead position as shown in Figures 1.2, 1.3, and 1.4, respectively. Generally, under these difficult conditions it is helpful to reduce the current from the value used on welding in the flat position.

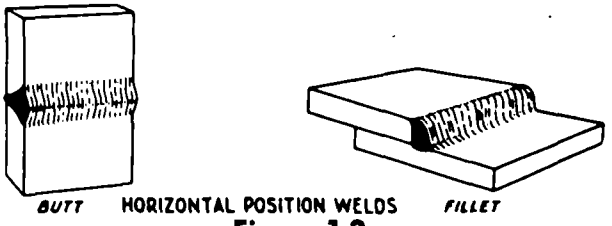


**Figure 1.2**

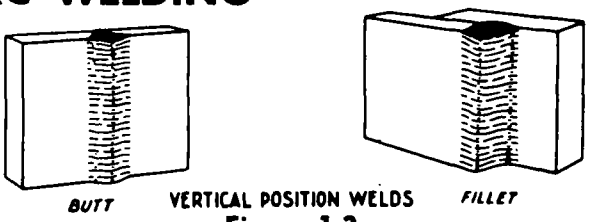


**Figure 1.3**

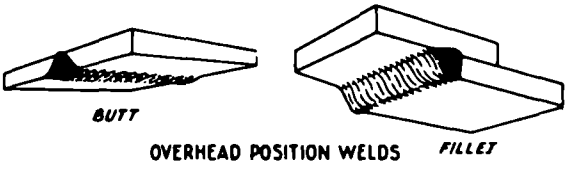


**Figure 1.4**

## STRIKING THE ARC - RUNNING BEADS

In learning to weld there are certain fundamental steps which must be mastered before one can attempt to weld on actual work. Preparatory to the actual striking of an arc, it is necessary to insert the electrode in the holder, as shown in Figure 2.1. For striking an arc, Figure 3.1 illus-

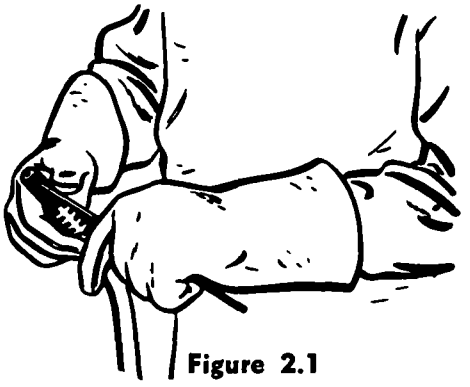

**Figure 2.1**

trates what is commonly knowing as the "scratching technique." In this method the striking end of the electrode is dragged across the work in a manner much the same as striking a match. When

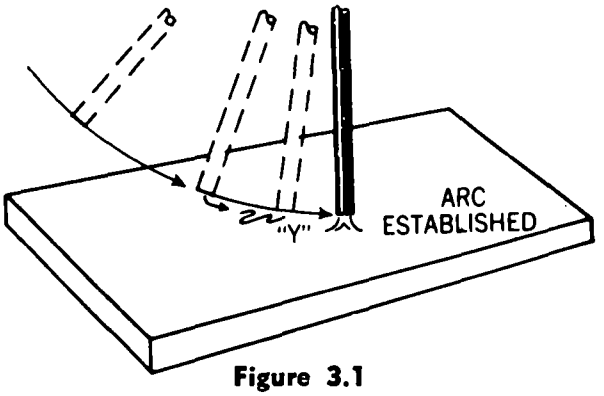


**Figure 3.1**

the electrode touches the work, the welding current starts. If held in this position, the electrode would "freeze" or weld itself to the work and to overcome this, the electrode is withdrawn from the work immediately after contact has been

made. The amount that the electrode is withdrawn is small and depends upon the diameter; this distance is known as the arc length. If in striking an arc, the electrode freezes, it may be freed by a quick twist of the wrist.

Another method of establishing the arc is available. It is known as the "tapping method" and is shown in Figure 4.1. In this the electrode in the holder is brought straight down on the work and immediately after contact, is withdrawn to the proper arc length.

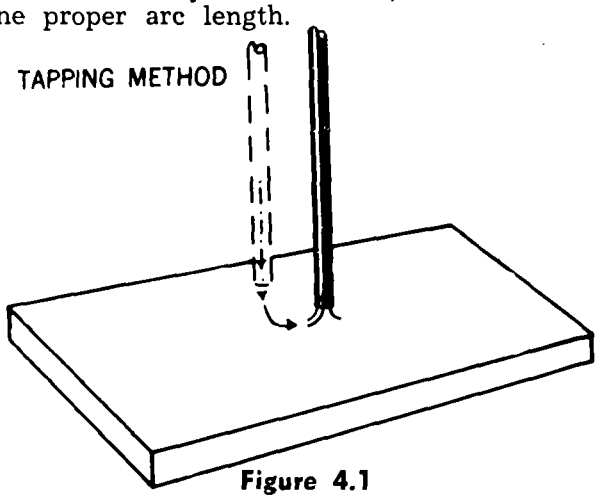


**Figure 4.1**

Practice striking the arc using both methods. Generally the scratching method is preferred for a-c welding.

Determination of the correct arc length is difficult since there is no ready means of measuring it. As a preliminary guide, use about 1/16″ arc length on 1/16″ and 3/32″ electrode; for ⅛″ and 5/32″ electrodes use about ⅛″ arc length. When skill is acquired, the sound of the arc will be a good guide. A short arc with correct current will give a sharp, crackling sound.

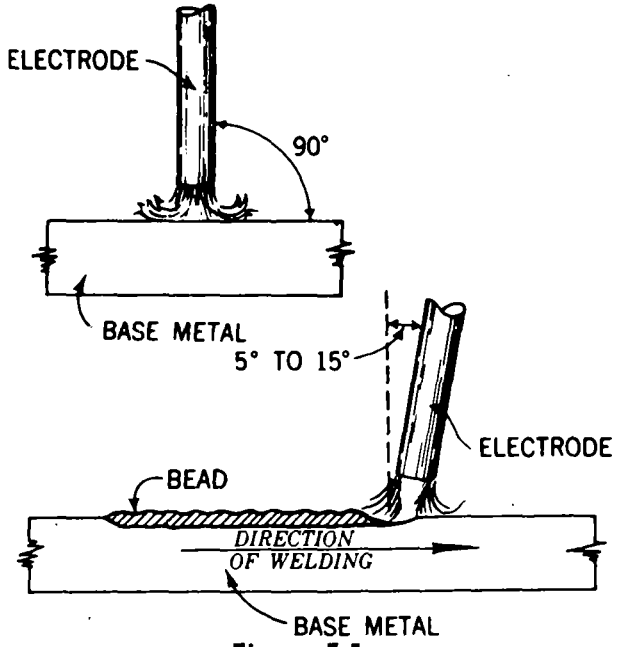


**Figure 5.1**

Examination of the deposited bead will give a further check.

Once the knack of starting and holding an arc has been learned, turn next to depositing weld metal. In the beginning it is best to run beads of weld metal on flat plates using a full electrode. Practice moving from left to right and from right to left. The electrode should be held more or less perpendicular to the work, except that tilting it ahead, in the direction of travel will prove helpful. The correct position is shown in Figure 5.1.

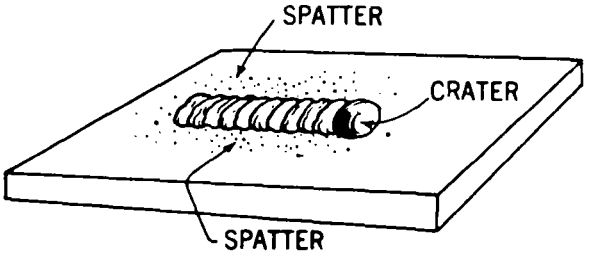


**Figure 6.1**

A proper bead is shown in Figure 6.1 while Figure 7.1, illustrates a cross-section through the bead and identifies the various terms used in describing a weld. To produce these results it is necessary to hold a short arc, travel at a uniform speed, and feed the electrode downward at a constant rate as it melts.

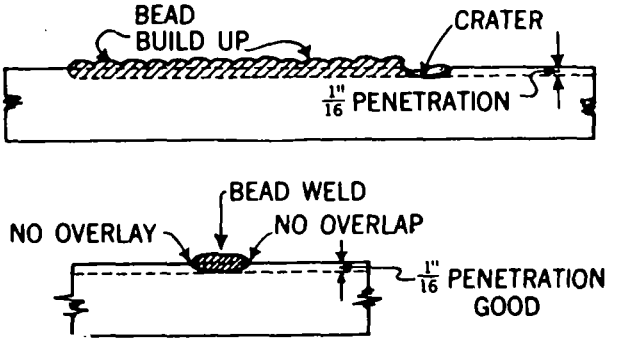


**Figure 7.1**

Probably the first attempts in the practice will fall short of the results shown. Too long an arc will be held or the travel speed will vary from slow to fast and the welds will look like the one in Figure 8.1. A cross section through such a weld

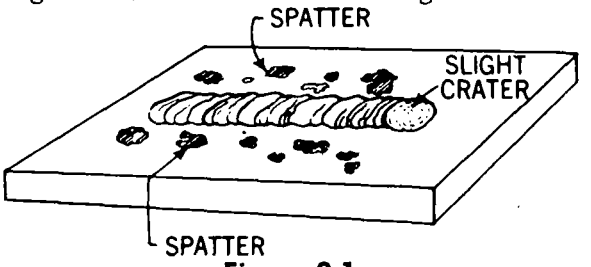


**Figure 8.1**

is given in Figure 9.1. In addition the weld will probably be spongy (porous) and of low strength.

Continue practicing until uniform beads as shown in Figure 6.1 can be produced every time. A good method of practicing is to deposit a series of beads, one next to the other until the plate is covered. Then deposit another series of beads at right angles to the first, thus building up the plate to a greater thickness.

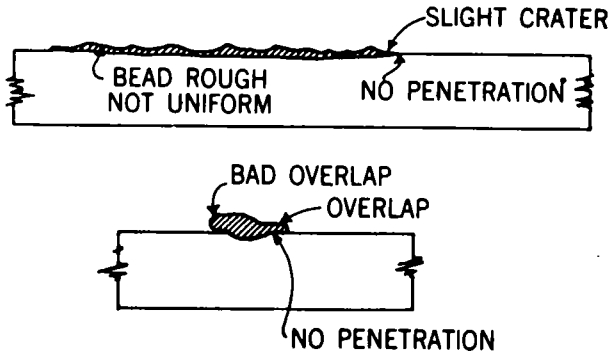


**Figure 9.1**

## WEAVING

When it is necessary to cover a wider area in one pass of the electrode, a method known as weaving is employed. In this the electrode is moved or oscillated from side to side in a set pattern. In order to be sure of uniform deposits, it is necessary to use a definite pattern such as

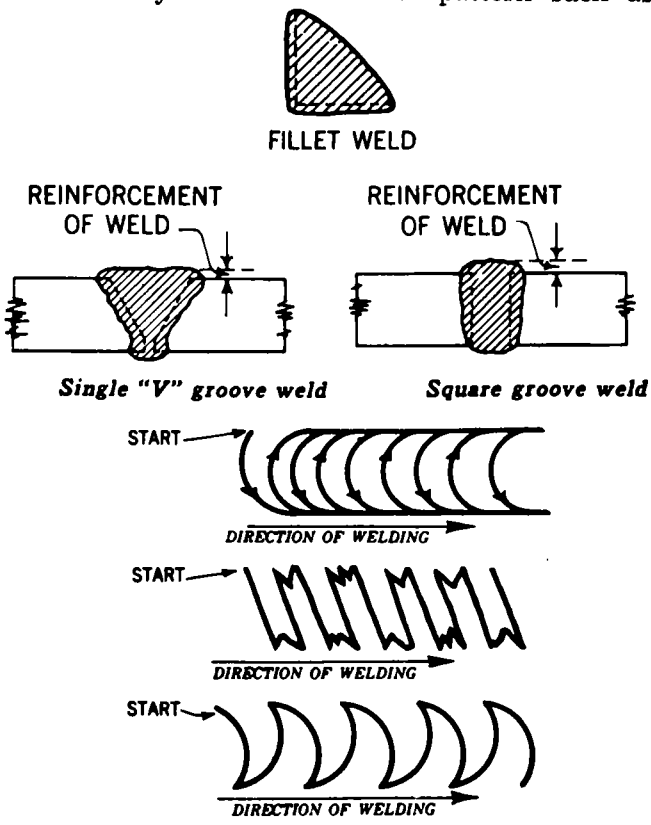


**Figure 10.1**

those illustrated in Figure 10.1. While weaving is helpful, particularly when building up metal, it should be limited to weaves not exceeding 2½ times the diameter of the electrode.

## BUTT JOINTS

Up to this point the discussion has covered only the deposit of beads on the flat plates. While such operations are helpful in building up worn parts or applying hard-facing materials, they do not help in learning to weld pieces together. For this purpose, other types of welds as illustrated in Figure 11.1 are necessary.

In making bead welds, previously described, it was probably noted that the depositing of weld metal on one side of the plate caused it to "curl" up towards the weld; this is called distortion and will almost always be found when heat is applied locally to a metal plate. Similarly in making a butt weld distortion will cause the edges of the plate to draw together ahead of welding. This is caused by the contraction of the deposited weld metal on cooling. It may be overcome by spreading the edges apart on a long taper of about ⅛" per foot.

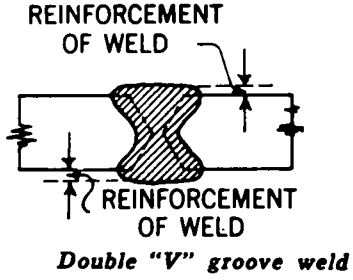


**Figure 11.1**

In making welds in a butt joint, preparation of the edges may be necessary to insure good results. In metal arc welding it is common practice to weld thin materials up to 3/16" thick without any special preparation using the square groove butt joint. For thickness of 3/16" and over the "V" groove either single or double is employed. Generally the single "V" groove will be satisfactory on thicknesses up to ¾" and in those cases, regardless of thickness, where one can work on the weld from one side only.

The best means for beveling steel for welding is by means of the oxyacetylene cutting torch. The work may be done with a hand guided torch or special oxyacetylene cutting machine. However, in performing this cutting, a scale will adhere to the plates. This must be removed by grinding or chipping before welding as it is likely to become entrapped and thus produce an unsound weld. Where oxyacetylene cutting equipment is not available, grinding will probably be the best means of preparing bevels. The angles of these bevels should be about 30 degrees and the bottom edge may be left square for a distance of about 1/16". See Figure 12.1.

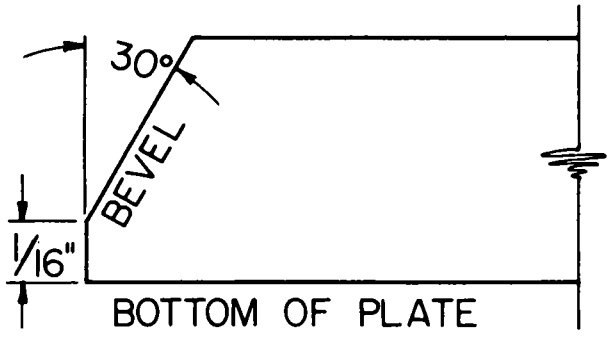


**Figure 12.1**

Practice making butt welds starting on thin material about ⅛″ thick. Avoid very thin material (around 1/16″ thick) in the beginning as this requires a fair degree of skill. Separate the squared edges of the ⅛″ material about 1/16″ and make a butt weld all the way through with a ⅛″ electrode. Probably the first attempts will fail to penetrate the sheet or may burn through. Keep trying, adjusting the current within the recommended range; also vary the travel speed to give the desired weld. Having mastered the ⅛″, proceed to a similar exercise on ¼″. This time, however, deposit a bead on each side of the joint and try to fuse one to the other. Since the weld from one side is in effect on ⅛″ thickness, no bevel is needed.

Next make a single "V" groove on ¼″ plate beveled 30 degrees. Start with a ⅛″ electrode for the first bead or layer and finish with a 5/32″ electrode. Be sure to penetrate about 1/32″ beyond the bottom of the "V" (called the root). When skill has been acquired on the ¼″ material, proceed to ⅜″ and then to ½″. On these, particularly the ½″, make also the double "V" butt joints. Generally speaking, it will be necessary to deposit a bead or layer for each ⅛″ thickness. On the heavier plates weaving of the top layers may be necessary to fill the groove completely.

When making practice butt welds it is wise to check the results occasionally. Where elaborate testing equipment is not available, this may be done with a hammer and vise. Grip a short, welding piece with the weld just above the jaws. Hammer it in a direction that tends to open the bottom, root side of the weld, in the manner shown in Figure 13.1. A good weld will not break

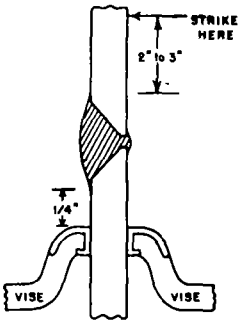


**Figure 13.1**

under this test but will bend over. If the weld breaks, examine it to determine the cause. If there are a large number of holes—the weld looks spongy— it is porous and this probably due to holding too long an arc. If there are bits of slag in the weld perhaps the arc was too short or the electrode was manipulated incorrectly thus permitting the molten slag from the coating to be trapped. This is quite likely to happen on a "V" joint made in several layers and calls for thorough cleaning between layers. Perhaps on breaking it will be found that the original surface of the bevel is still evident. That means that it was not melted and the cause is quite likely to be found in too fast a travel speed or insufficient heat.

## TEE AND LAP JOINTS

The other basic type of weld, the fillet weld, is used for making tee and lap joints. For this type of welding, no special preparation, other than squared edges, is necessary. Typical welded tee and lap joints are pictured in Figures 14.1 and 15.1 respectively.

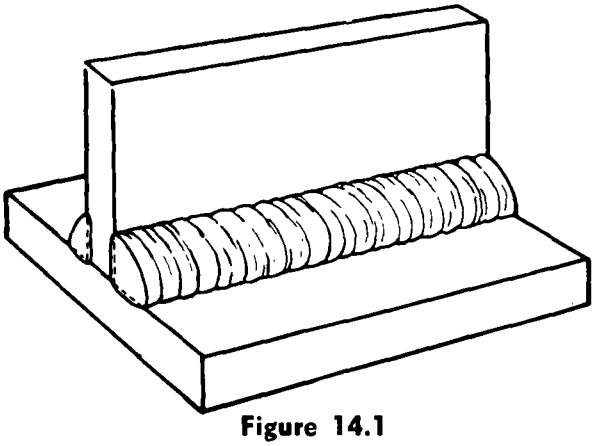

**Figure 14.1**

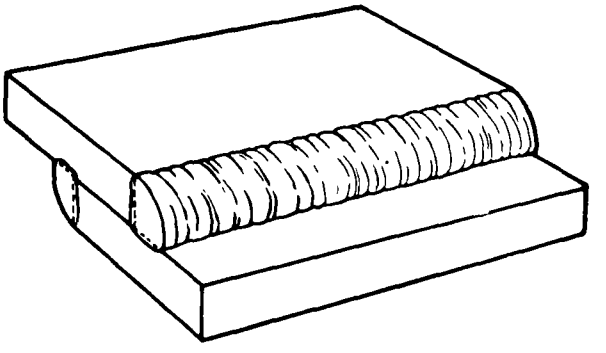

**Figure 15.1**

Considering the tee joint first, it will be seen immediately that the different locations of the pieces creates a problem. The method of holding the electrode for butt welds will not be satisfactory. To deposit a single pass fillet weld hold the electrode as shown in Figure 16.1. This will

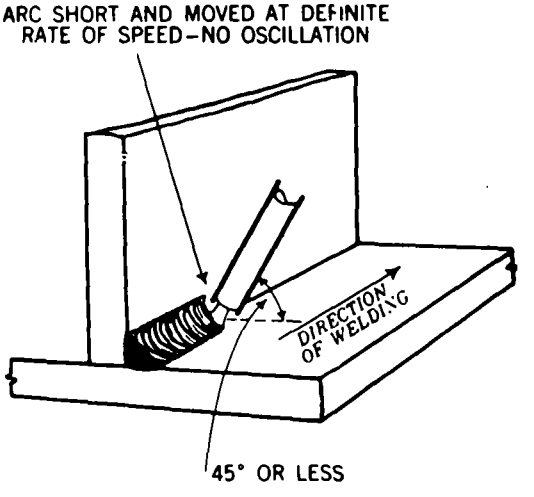


**Figure 16.1**

provide fusion into the corner and a fillet, the sides of which will be approximately equal. For maximum strength a fillet weld should be deposited on each side of the upright section. When a heavier fillet is needed, deposit a second layer as indicated in Figure 17.1, using any of the weaving patterns shown in Figure 17.2.

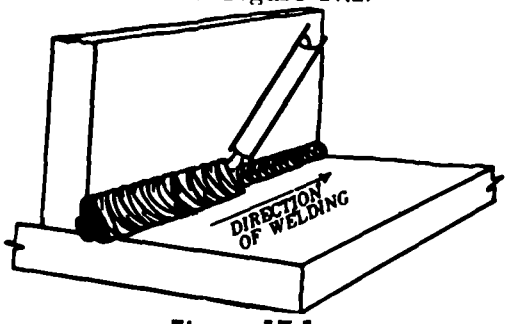


**Figure 17.1**

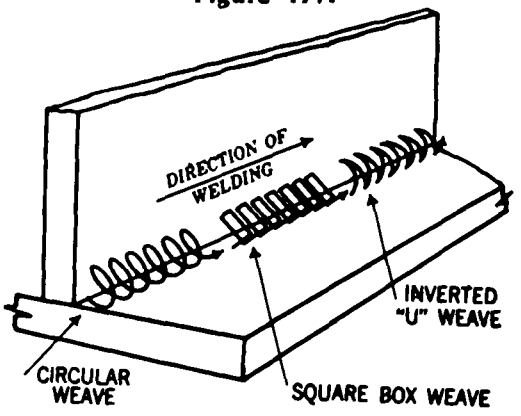


**Figure 17.2**

The lap joint, while involving the same fundamental weld type, the fillet, has metal distributed differently and therefore requires still another technique. The details of the application are given in Figure 18.1, for a single pass weld. For a two pass weld Figure 18.2 provides the details.

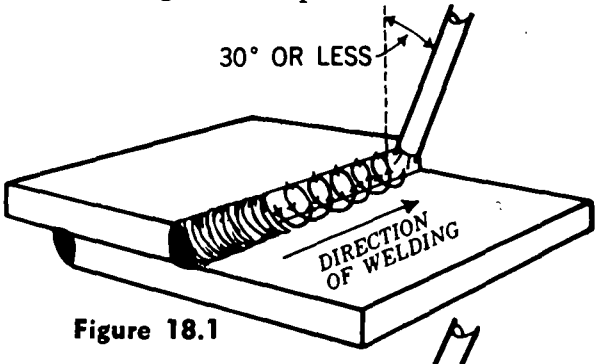


**Figure 18.1**

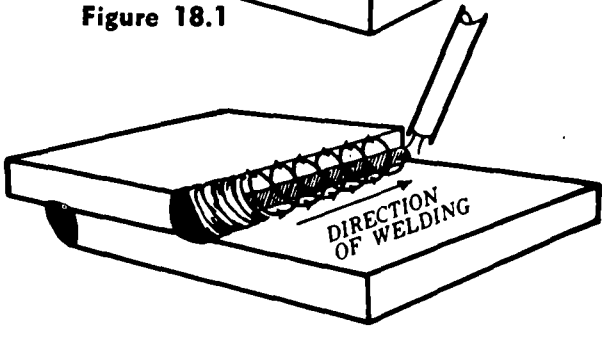


**Figure 18.2**

## WELDING VERTICALLY, HORIZONTALLY AND OVERHEAD

The importance of welding in the flat position, whenever possible, cannot be stressed too strongly. The quality of the weld is better, the operation easier and faster. However, occasions will arise when it is necessary to work on parts fixed in position under which conditions welds must be deposited horizontally, vertically and overhead. It must be realized at the very beginning that welding in these positions is difficult and will require constant practice to develop skill.

As in the case of welding in the flat position, it is best to start practicing by first running bead welds in the various positions. Then as facility is gained on these operations practice may be continued on butt and fillet welds (tee and lap joints) in these positions.

One of the first facts noted when welding in these positions is that the force of gravity tends to cause the molten metal to drip (fall) down. The technique used, therefore, must be designed to overcome this and since it is difficult it is best to approach this by steps. To accomplish this, start by making horizontal bead welds on plates inclined at 45 degrees as shown in Figure 19.1. When

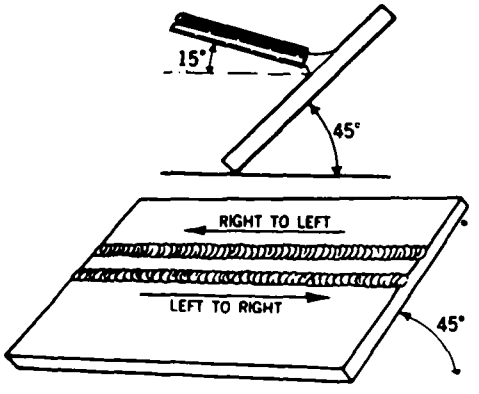


**Figure 19.1**

this has been mastered so that uniform beads can be made consistently, practice on welding vertically may be started. Again begin with an easy operation such as running beads vertically on plates set at 45 degrees—see Figure 20.1.

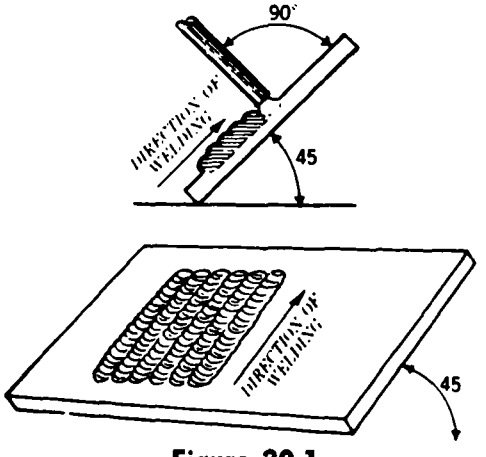


**Figure 20.1**

To progress with this practice it is necessary now to move the plates into vertical position. The details of horizontal bead welds are given in Figure 21.1.

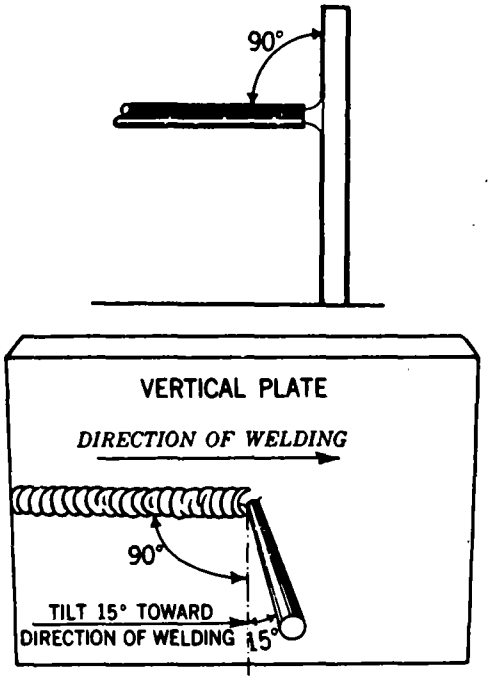


**Figure 21.1**

Welding vertically may be performed either by carrying the weld upward or starting from the top and welding down. It is generally conceded that working upward is easier and therefore, bead welds in this manner should be practiced. A method for making weave beads is illustrated in Figure 22.1.

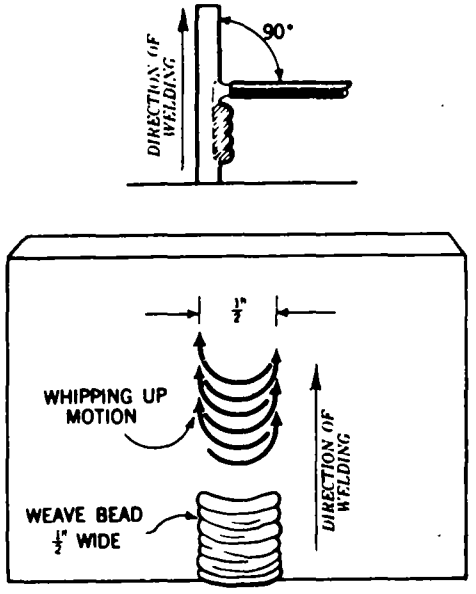


**Figure 22.1**

Since bead welds are of limited practical value, this experience must be extended by practicing on butt welds in the vertical and horizontal patterns.

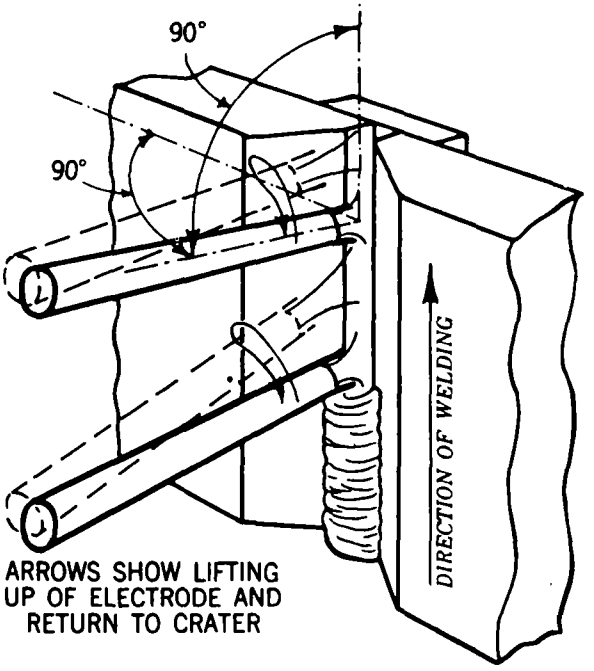


**Figure 23.1**

Figure 23.1 provides information suitable for a single pass vertical butt weld or the first pass of a multiple layer deposit. Two methods of depositing the subsequent layers are given in Figures 24.1 and 24.2.

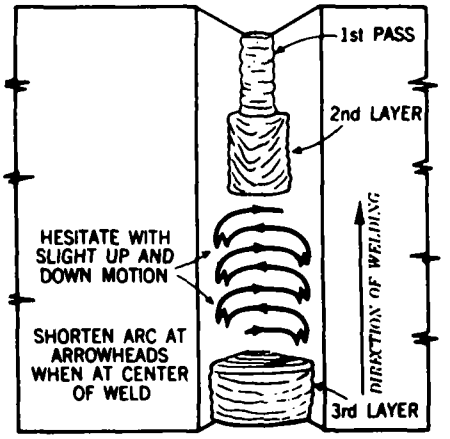


**Figure 24.1**

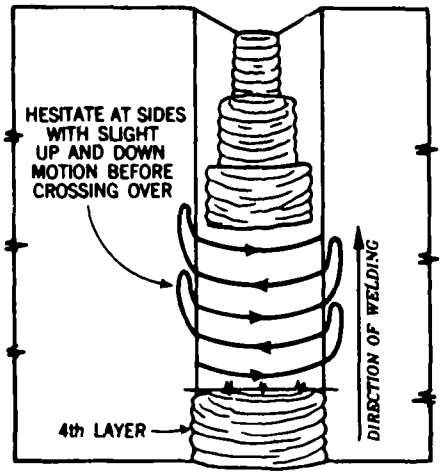


**Figure 24.2**

For horizontal welds the details are shown in Figures 25.1 through 25.8. Note that a strip of metal is shown at the root of the weld—this is known as the backing strip. Its use permits the securing of a sound root pass without great difficulty. In use, the beveled plate edges should be spaced on the backing strip and the strip tack welded to the plates on the reverse side.

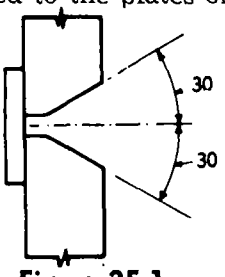


Figure 25.1

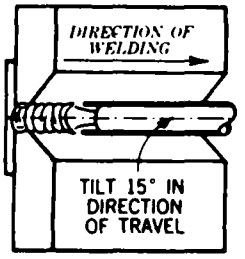


Figure 25.2

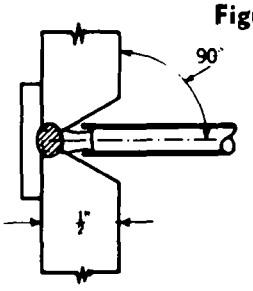


Figure 25.3

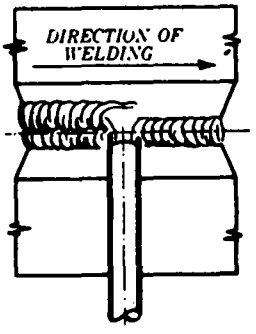


Figure 25.4

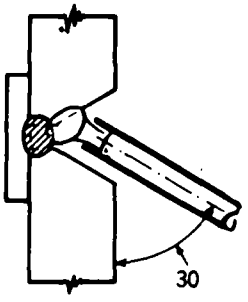


Figure 25.5

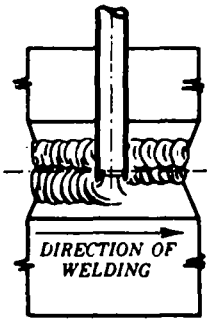


Figure 25.6

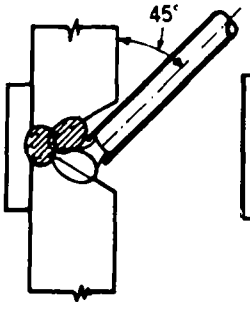


Figure 25.7

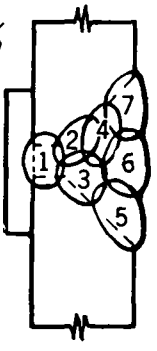


Figure 25.8

For fillet welds on tee joints the technique is shown in Figure 26.1. For vertical lap joints the same technique may be employed notwithstanding the difference in positions of the plates. Also, when depositing a multilayer fillet weld, this same method would be used to deposit the first layer on both lap and tee joints. For depositing subsequent layers on tee joints two means are used and are shown in Figures 27.1 and 27.2. For the additional layers on lap joints a somewhat similar weave may be seen in Figure 28.1.

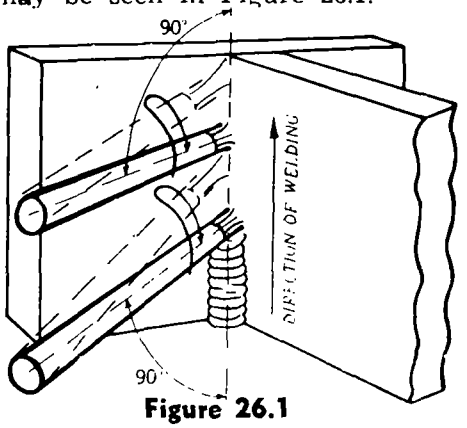


Figure 26.1

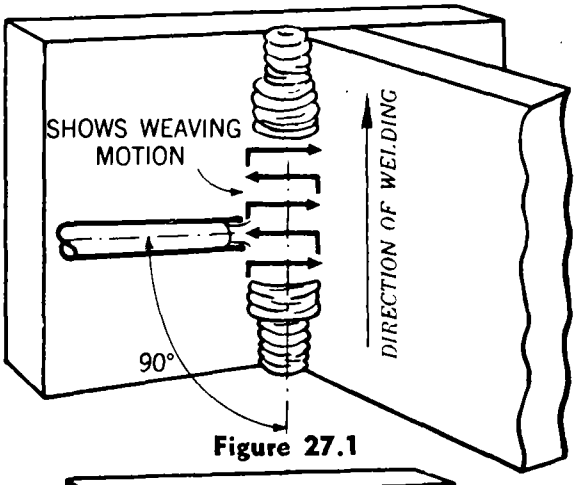


Figure 27.1

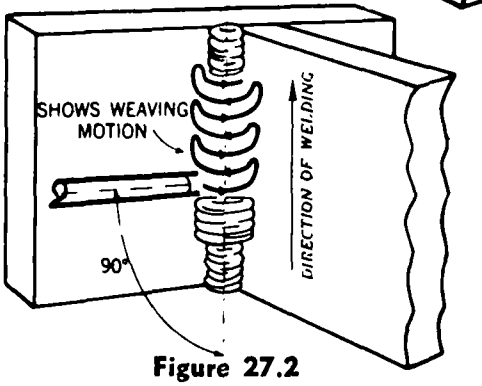


Figure 27.2

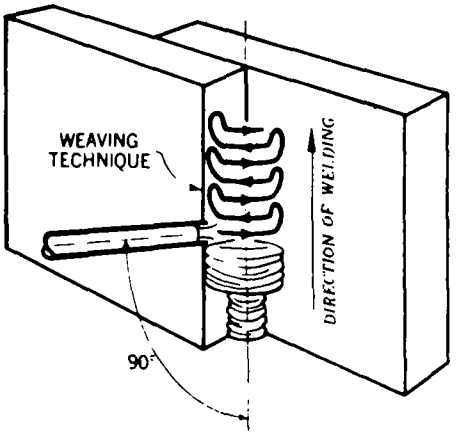


Figure 28.1

Welding in the overhead position is the final problem to master. Again proceed through the steps of making bead welds, the making of butt welds and finally the making of fillet welds. For bead welds the electrode position, Figure 29.1, will prove helpful. When weaving is necessary, the pattern in Figure 30.1 may be used. The technique for overhead butt welds is illustrated in Figure 31.1; this covers single pass welds or the first pass of multilayer welds. Subsequent beads may be deposited as shown in Figure 32.1. For depositing single layer fillets or the first layer of multiple fillets in the overhead position the technique in Figure 33.1 should be employed. The sequence for depositing beads on a multilayer fillet weld is provided in Figure 34.1. Note that single beads are recommended and for that reason use the same technique shown in Figure 33.1. Again the technique for fillet welds may be employed for welding lap joints.

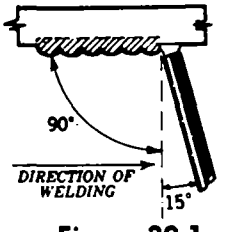

Figure 29.1

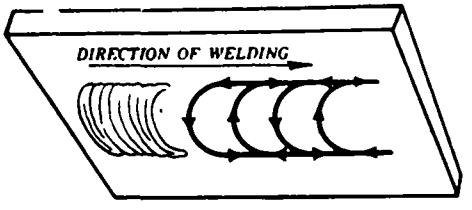

Figure 30.1

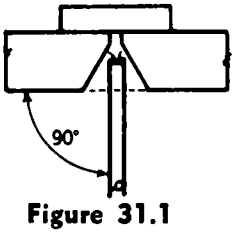

Figure 31.1

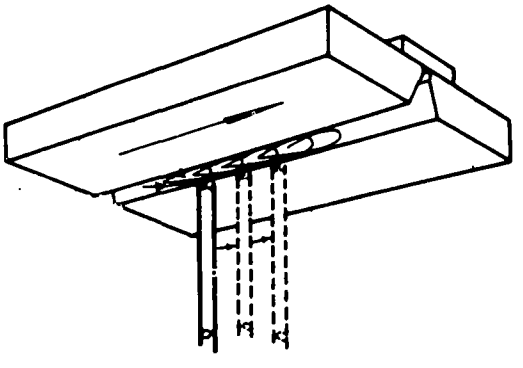
Figure 31.2

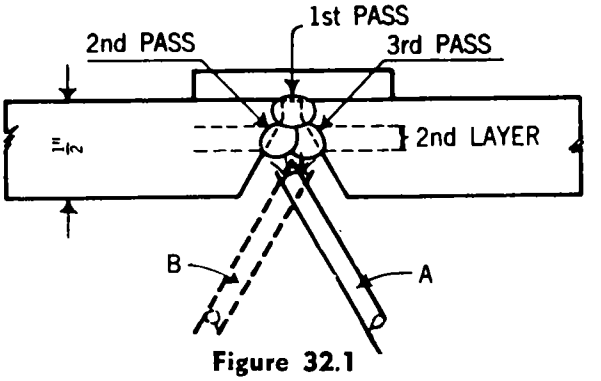

Figure 32.1

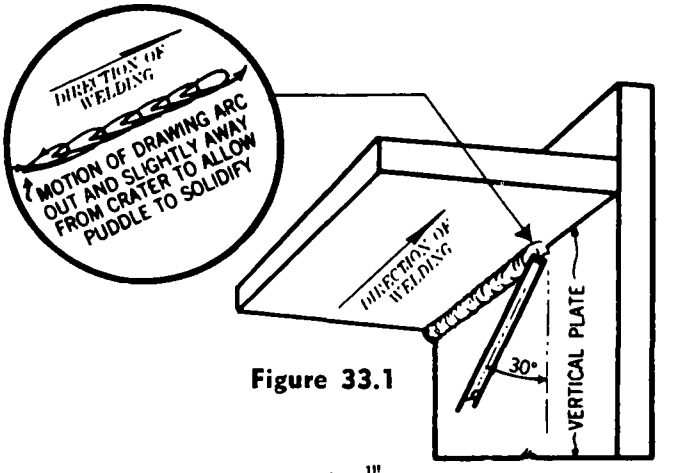

Figure 33.1

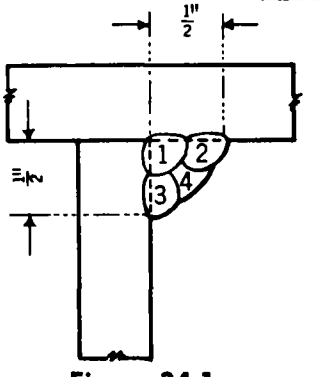

Figure 34.1

## CONCLUSION

It may be appreciated that no printed instruction can impart to the beginner the skill necessary for successful welding. Personal instruction by an experienced welding operator is the best means devised to date for the accomplishing this end. Therefore, an effort should be made to secure some facility for instruction and practice under competent supervision. In any event the beginner should at least secure the benefit of criticism of finished welds by a qualified welder.

CURRENT REQUIREMENTS FOR MILD STEEL ELECTRODES

| Electrode Diameter | Amperage Min. | Amperage Max. |
|---|---|---|
| 5/64 | 20 | 50 |
| 3/32 | 40 | 80 |
| 1/8 | 65 | 125 |
| 5/32 | 90 | 160 |
| 3/16 | 120 | 180 |

February 1964 FORM: PL-114-2N-C6

Effective with serial No. N295574

| MODEL | STOCK NO. |
|---|---|
| M-180 | 900 001 |
| M-180P | 900 010 |
| M-225 | 900 019 |
| M-225P | 900 028 |

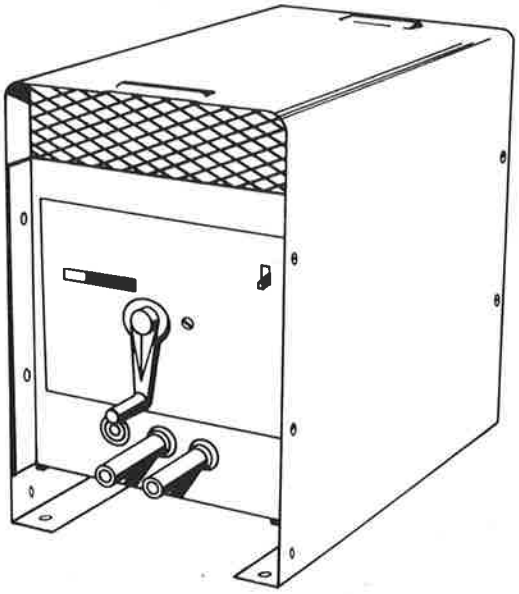

# Parts List Manual

miller ELECTRIC MFG. CO.
APPLETON, WISCONSIN, U.S.A. 54911

ADDITIONAL COPY
PRICE 10 CENTS

NWSA CODE NO. 4579

PRINTED IN U.S.A.

FORM PL-114-2N-C6

# PARTS LIST

PRINTED IN U.S.A.

# PARTS LIST

## CIRCUIT DIAGRAM #A-408-F1, A-522-A2

**Effective with Serial No. N295574**

| Item No. | Dia. Mkgs. | Factory Part No. | DESCRIPTION | AMOUNT REQUIRED 180 Amp W/O PFC | 180 Amp W/PFC | 225 Amp WO/PFC | 225 Amp W/PFC |
|---|---|---|---|---|---|---|---|
| 1 | | 10 650 | Pin, Roll | 1 | 1 | 1 | 1 |
| 2 | S1 | 11 629 | Switch, Power | 1 | 1 | 1 | 1 |
| 3 | | 13 826 | Nameplate | 1 | | | |
| 3 | | 13 827 | Nameplate | | 1 | | |
| 3 | | 13 828 | Nameplate | | | 1 | |
| 3 | | 13 829 | Nameplate | | | | 1 |
| 4 | | 14 699 | Wrapper | 1 | 1 | 1 | 1 |
| 5 | | 14 701 | Panel, Rear | 1 | 1 | | |
| 5 | | 14 703 | Panel, Rear | | | 1 | 1 |
| 5 | | 14 702 | Panel, Rear W/Access Door | 1 | 1 | | |
| 5 | | 14 087 | Panel, Rear W/Access Door | | | 1 | 1 |
| 6 | | 14 088 | Panel, Front | 1 | 1 | 1 | 1 |
| 7 | | 14 029 | Bracket, Fan Mounting | | | 1 | 1 |
| 8 | | 19 673 | Crank | 1 | 1 | 1 | 1 |
| 10 | | 23 661 | Cord, Power W/Plug (208/230V) | 1 | 1 | 1 | 1 |
| 10 | | 23 634 | Cord, Power W/O Plug | 1 | 1 | 1 | 1 |
| 11 | C1 | 31 614 | Capacitor, Power Factor Correction | | 1 | | 1 |
| 12 | FM | 32 601 | Fan Motor | | | 1 | 1 |
| 13 | | 32 602 | Blade, Fan 60 Cycle | | | 1 | 1 |
| 13 | | 32 615 | Blade, Fan 50 Cycle | | | 1 | 1 |
| 14 | P | *33 698 | Coil, Primary R.H. | 1 | | | |
| 14 | P | *33 701 | Coil, Primary R.H. | | 1 | | |
| 14 | P | *33 702 | Coil, Primary R.H. | | | 1 | |
| 14 | P | *33 705 | Coil, Primary R.H. | | | | 1 |
| 15 | P | *33 699 | Coil, Primary L.H. | 1 | | | |
| 15 | P | *33 700 | Coil, Primary L.H. | | 1 | | |
| 15 | P | *33 703 | Coil, Primary L.H. | | | 1 | |
| 15 | P | *33 706 | Coil, Primary L.H. | | | | 1 |
| 16 | S | *33 653 | Coil, Secondary | 2 | 2 | | |
| 16 | S | *33-704 | Coil, Secondary | | | 2 | 2 |
| 17 | | 36 689 | Shunt Assembly | 1 | 1 | 1 | 1 |
| 18 | | 38 894 | Terminal Strip, 4 Post | 1 | 1 | 1 | 1 |
| 18 | | 38 798 | Terminal Strip, 6 Post | 1 | 1 | 1 | 1 |
| 19 | | **38 605 | Panel Assembly, Secondary Consisting of: | 1 | 1 | 1 | 1 |
| 20 | | 38 606 | Board | 1 | 1 | 1 | 1 |
| 21 | | 39 603 | Receptacle, Jack (Black) | 2 | 2 | 2 | 2 |
| 22 | | 39 642 | Receptacle, Jack (Red) | 1 | 1 | 1 | 1 |
| 23 | | **39 608 | Plug, Jack | 2 | 2 | 2 | 2 |
| 24 | | 39 778 | Receptacle, ground - 3 wire | 1 | 1 | 1 | 1 |

## FIGURE B 36-689 SHUNT ASSEMBLY

| Item No. | Dia. Mkgs. | Factory Part No. | DESCRIPTION | AMOUNT REQUIRED |
|---|---|---|---|---|
| 25 | | 10 677 | Block, Rear Shunt Molded | 1 |
| 26 | | 10 618 | Block, Rear Threaded Insulation | 1 |
| 27 | | 10 851 | Block, Front Insulation | 1 |
| 28 | | 10 839 | Block, Front Shunt | 1 |
| 29 | | 10 840 | Guide, Shunt | 2 |
| 30 | | 10 841 | Brake, Shunt | 1 |
| 31 | | 10 842 | Spring, Shunt Brake | 1 |
| 32 | | 10 620 | Ball, Steel | 1 |
| 33 | | 10 852 | Screw, Lead | 1 |
| 34 | | 10 634 | Screw, Shunt Guide With Nuts & Washers | 2 |
| 35 | | 10 653 | Washer, Oilite ⅜" ID, ¾" OD | 1 |
| 36 | | **10 615 | Spring, Indicator | 1 |
| 37 | | 13 810 | Band, Indicator | 1 |
| 38 | | 24 612 | Lock Nut With Allen Screws | 1 |
| 39 | | 36 625 | Block, Shunt | 1 |

BE SURE TO PROVIDE MODEL AND SERIAL NUMBERS WHEN ORDERING REPLACEMENT PARTS.

**Recommended spare parts.

*Replace only at factory or Authorized Service Station.

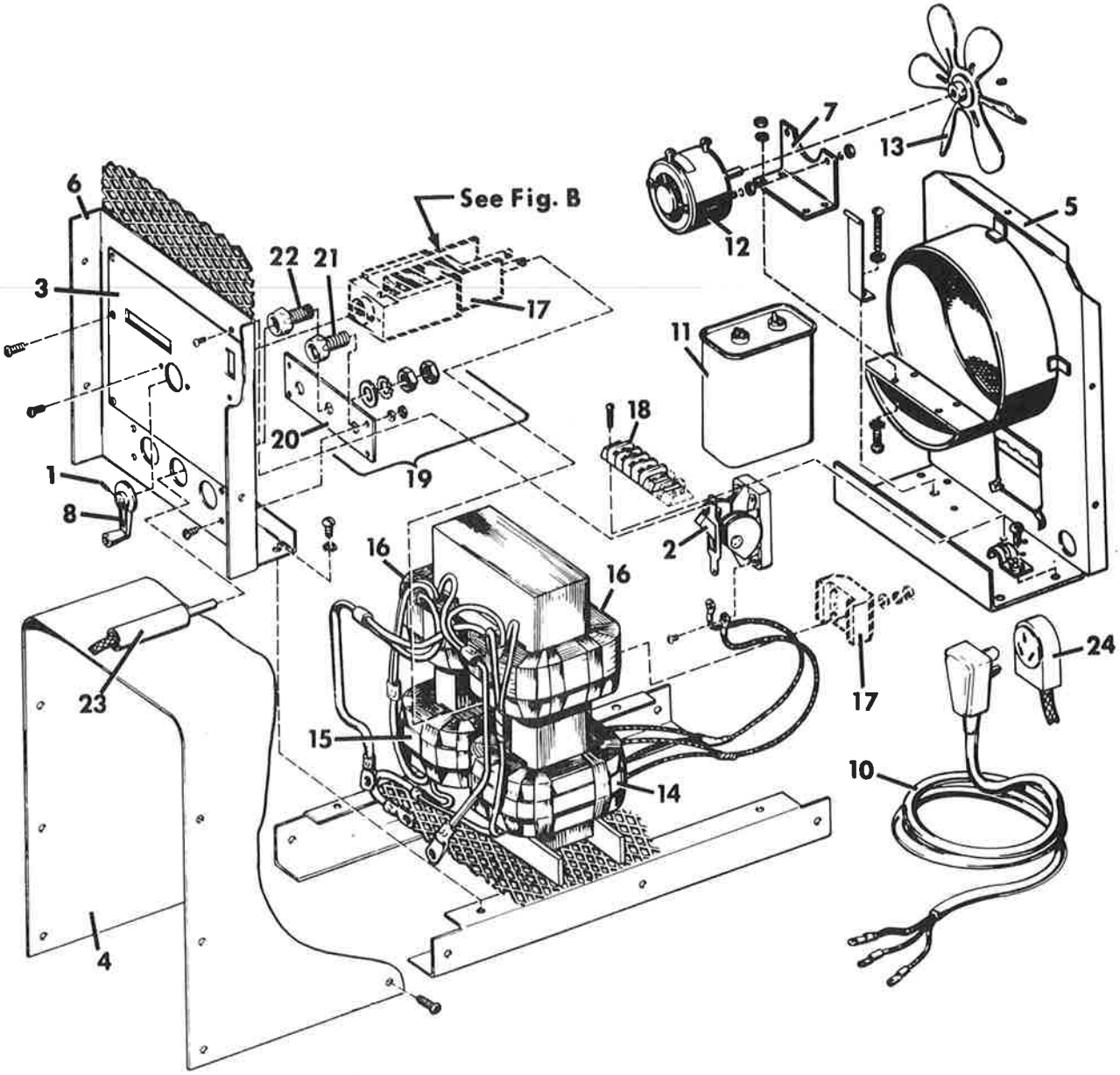


FIGURE A

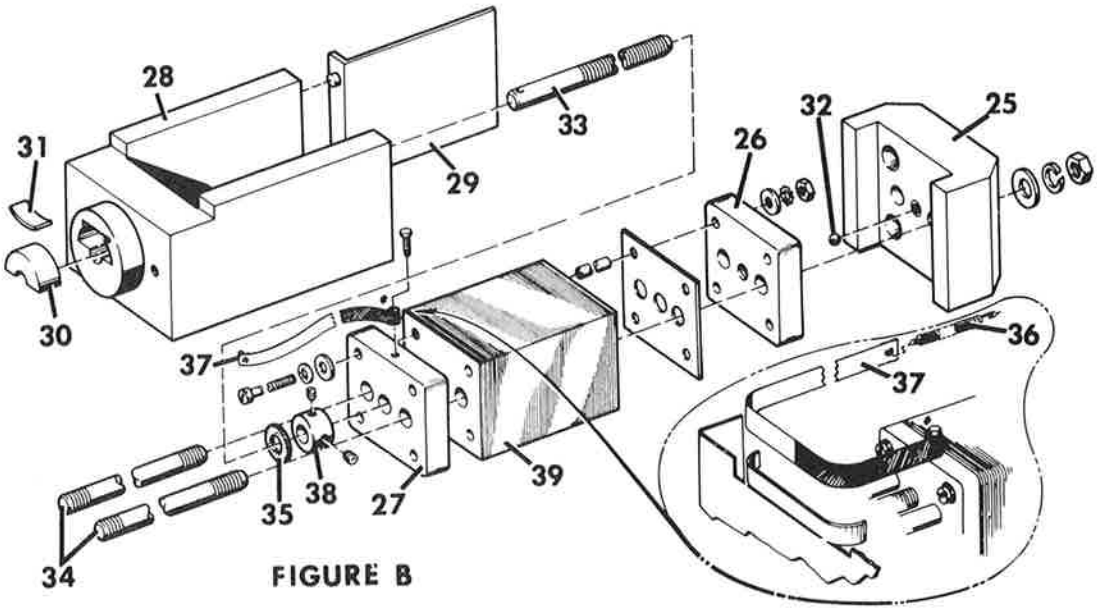


FIGURE B