This print is and will remain the property of
Miller Electric Mfg Co, Appleton, WI. Furnished
with the understanding it is not to be duplicated
in any manner without approval of Miller Electric Mfg Co.
This print is furnished to assist order requirements
and will be returned to Miller Electric Mfg Co
upon request.

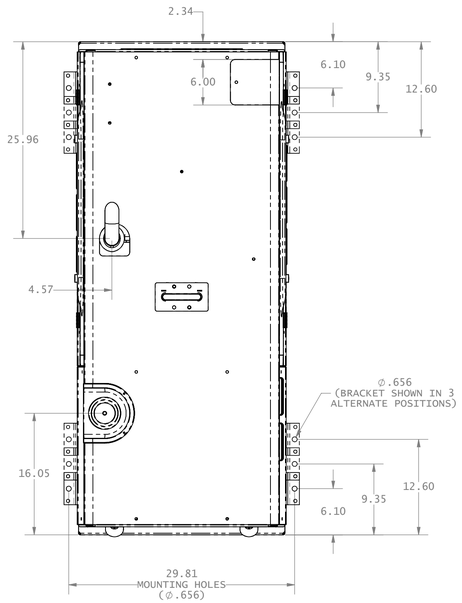

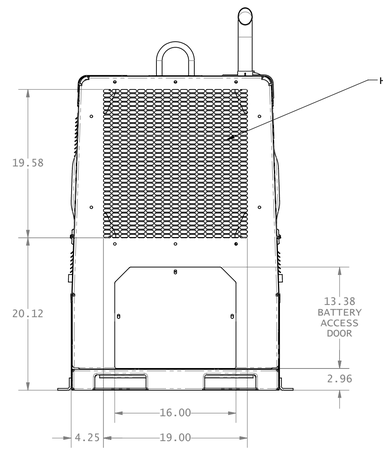

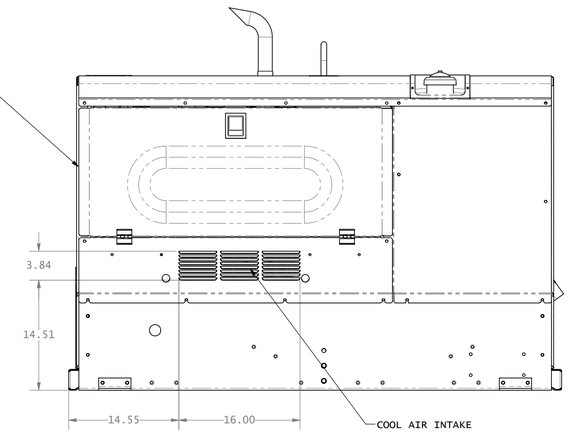

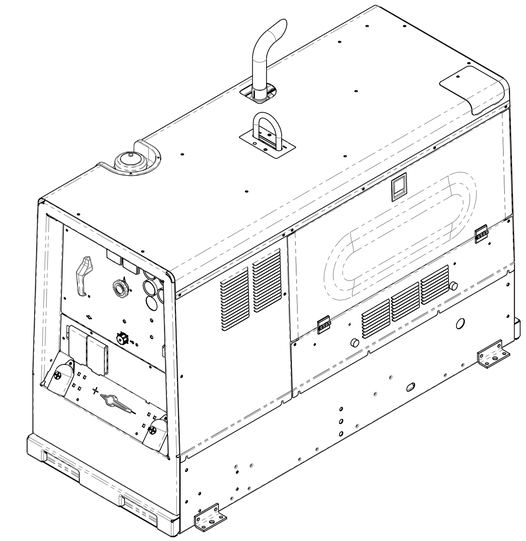

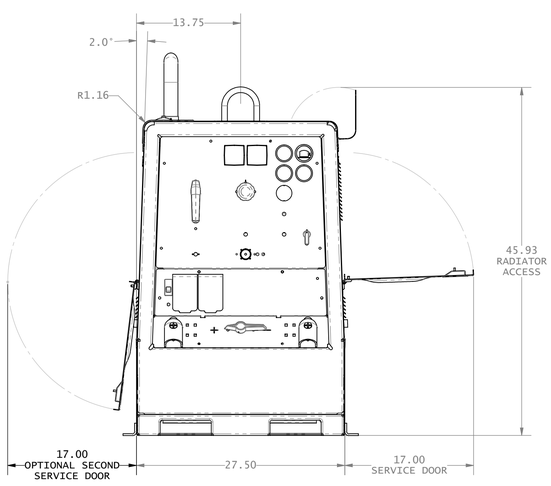

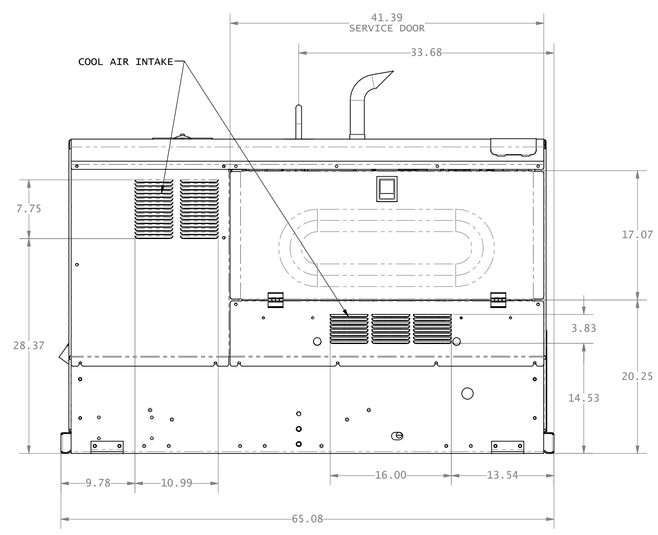

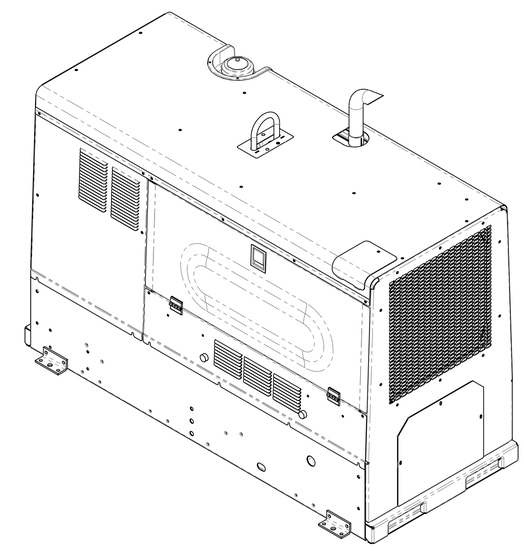

THIS LAYOUT IS USED FOR THE FOLLOWING
BASE STOCK NUMBERS:
907327, 907173, 907175, 907329, 907184,
907185, 907186, 907187, 907181, 907331

Rev	Date	By	ECO	Revision Description
A	12-13-11	DCW		ORIGINAL RELEASE

Tolerances Unless Otherwise Specified
Decimal ±:
Fractional ±:
Angular ±:
Finish:

Miller
MILLER ELECTRIC MFG. CO.,
APPLETON, WI. USA

Title:
ILLUSTRATION
BB 400/500
SERVICE TRUCK

DRAWING NOT TO SCALE
CONFIDENTIAL

Drawn By: **DCW**
Date: **12-13-11**
Size: **D**
Drawing No: **256357**
Rev: **A**