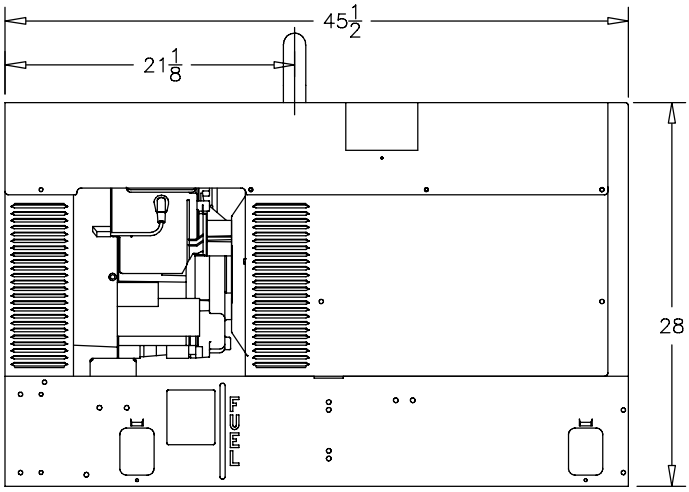

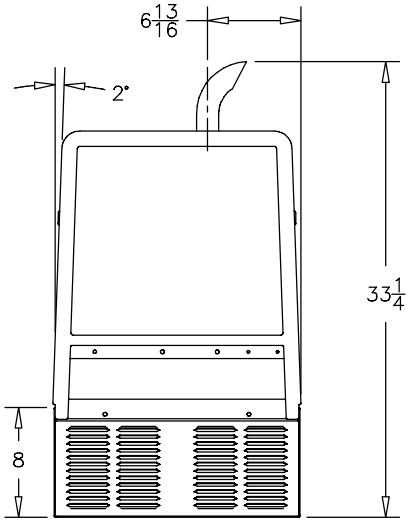

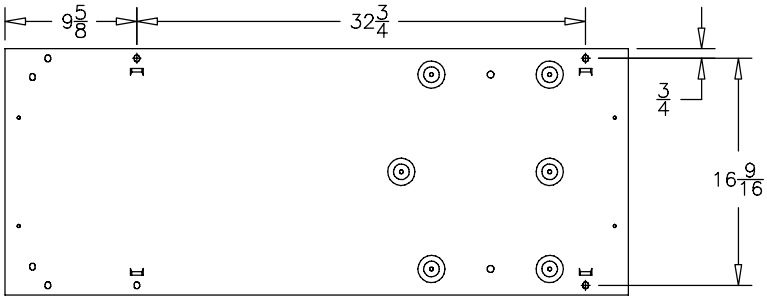

THIS LAYOUT IS USED FOR THE FOLLOWING BASE STOCK NUMBERS: 903517, 903810, 907039, 907041, 907042, 907810, 907044 & 907072

REV.	DATE	BY	ECO	REVISION DESCRIPTION
A				INITIAL RELEASE

TOLERANCES UNLESS SPECIFIED
DED. ±
FRAC. ±
ANGL. ±
FINISH

THIS PRINT IS AND WILL REMAIN THE PROPERTY OF MILLER ELECTRIC MFG. CO. AND SHALL BE CONFIDENTIAL AS TO THE MATERIAL CONTAINED THEREON. THIS PRINT IS TO BE USED ONLY FOR THE PURPOSE OF MILLER ELECTRIC MFG. CO. AND SHALL NOT BE COPIED OR REPRODUCED OR OTHERWISE USED FOR ANY PURPOSE WITHOUT WRITTEN PERMISSION. ALL COPIES OF PRINTS ARE TO BE RETURNED TO MILLER ELECTRIC MFG. CO. UPON OUR REQUEST.

MILLER ELECTRIC MFG. CO.
APPLETON, WI. USA

TITLE:
TECH DRAWING BOBCAT 225 NT, 250 NT, 3-PHASE; TRAILBLAZER DC, 301G

DRAWING NOT TO SCALE | CONFIDENTIAL

DRN. BY: RD/TB
DATE: 11-8-05
SIZE: D
DWG. NO. 804427
REV. A